GD350-19 Series VFD for Hoisting

Management Service

TÜV SÜD ISO 9001 · TÜV SÜD ISO 14001 · CE · SAA APPROVALS · Enel · DVE · G83

CONTENTS

Company Introduction 2

Product Introduction 3

Product Advantage 4

Product Specification 11

Type Selection 12

Power Ratings 12

Extension Cards 13

Optional Parts 14

Reactor & Filter Selection 15

Brake System Selection 16

Regeneration Feedback Unit Selection 17

Product Dimension 18

Wiring Diagram 26

Marketing Service Network 27

Company Introduction

INVT (Shenzhen INVT Electric Co., Ltd) has been concentrating on industry automation and energy power since its foundation in 2002 and is committed to “Providing the best product and service to allow customers more competitiveness”. INVT goes public in 2010 and is the first A-share listed company (002334) in Shenzhen Stock Exchange in the industry. At present, INVT owns 16 subsidiaries and more than 3000 employees, over 30 domestic offices and warranty centers and 8 overseas branches, forming a sales network covering more than 60 overseas countries and regions.

INVT has been awarded as the Key High-tech Enterprise of National Torch Plan based on mastering of key technologies in power electronics, auto control and IT. With business covering industry automation, new-energy vehicle, network power and rail transit, INVT has established 12 R&D centers nationwide, boasts more than 850 patents and owns the first lab in the industry awarded ACT qualification from TUV SUD, UL-WTDP and CNAS National Lab. The industrial parks in Gongming and Suzhou aim to provide customers with advanced integrated product development design management, comprehensive product R&D test and auto informational production. The worldwide INVT branches and warranty centers are ready to offer customers all-around back-ups including professional solutions, technical trainings and service support.

In the next decade, INVT will continue to take " Honesty and Integrity, Professionalism and Excellence" as our business philosophy, enhance core business sectors including industrial automation, new energy vehicle, network power and rail transit based on the three major technologies in industry automation and energy power fields, and strive to become a leading, responsible and harmonic international professional group armed with proper product structure, leading technologies, efficient management, robust profitability and superior competitiveness.

Suzhou Industrial park

East China industrial base
and east China R&D center of group.

Guangming Industrial Park

Group headquarter and new product
business development and incubation base.

Product Introduction

Goodrive350-19 series VFDs are the new generation of VFDs, that INVT develops for hoisting machinery by using advanced control technologies based on more than ten-year accumulative hoisting-industry experience. The VFDs achieve excellent torque performance by integrating various special functions, including brake control, zero servo, quick stop, master/slave control, switchover between 3 sets of motor parameters, pre-magnetizing, light-load speed acceleration, rope detection, and travel limit, to ensure the safety, reliability, and high efficiency of the machinery. The VFDs can be widely used to drive the mechanisms such as about lifting, tilting, luffing, crane, horizontal movement motor, rotary, and grabbing in hoisting machinery.

- Support asynchronous induction motor and permanent magnet synchronous motor drive control.
- Integrated rich lifting industry dedicated control functions.
- STO function.
- Compatible with 1M~100M fieldbus.
- Superior dynamic response and control accuracy.

Port machinery

Bridge crane

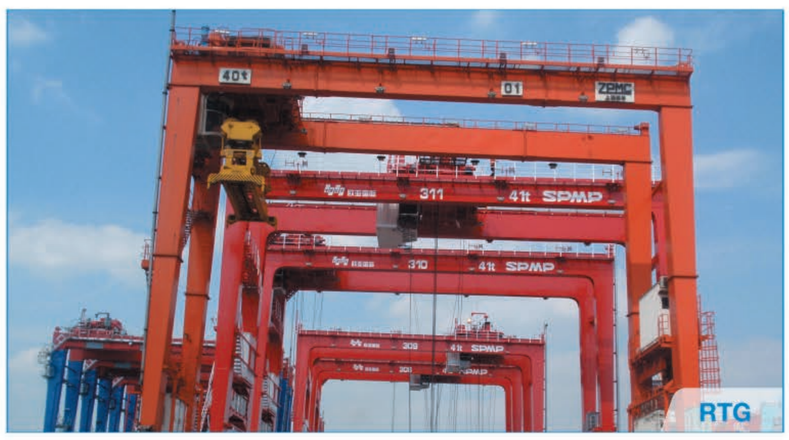
RTG

Portal crane

Gantry crane

Hoist machinery

Construction lifting equipment

European type crane

Mine hoist

Belt conveyor

Product Advantage

Safe and Reliable

Brake logic control

The brake logic control integrates the torque verification function to ensure the torque output of the motor, safe and without slipping.

The brake logic control supports the start direction, forward and reverse switching of the brake selection function, which meets various starting requirements and has good adaptability.

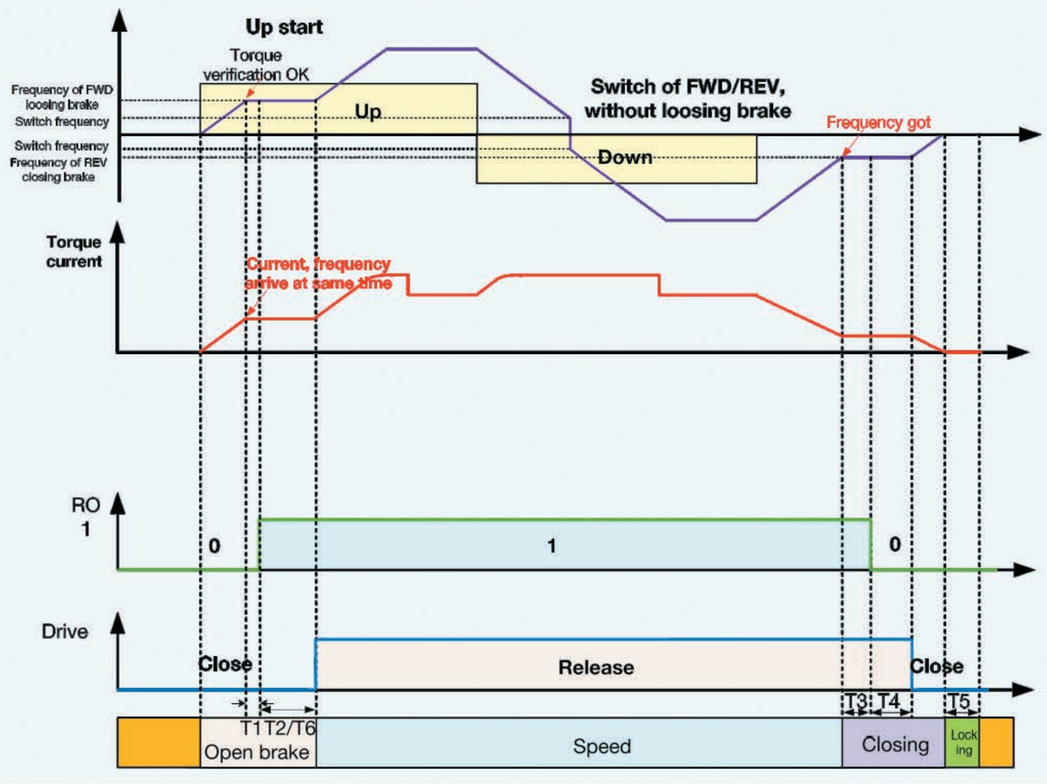

Zero-servo

When the motor is locked at zero speed, the motor can remain locked at zero speed, even if the external force in the forward and reversed direction is applied. When the brake fails, it can also drive the motor to control full-load hovering or lower speed fall to ensure safe use.

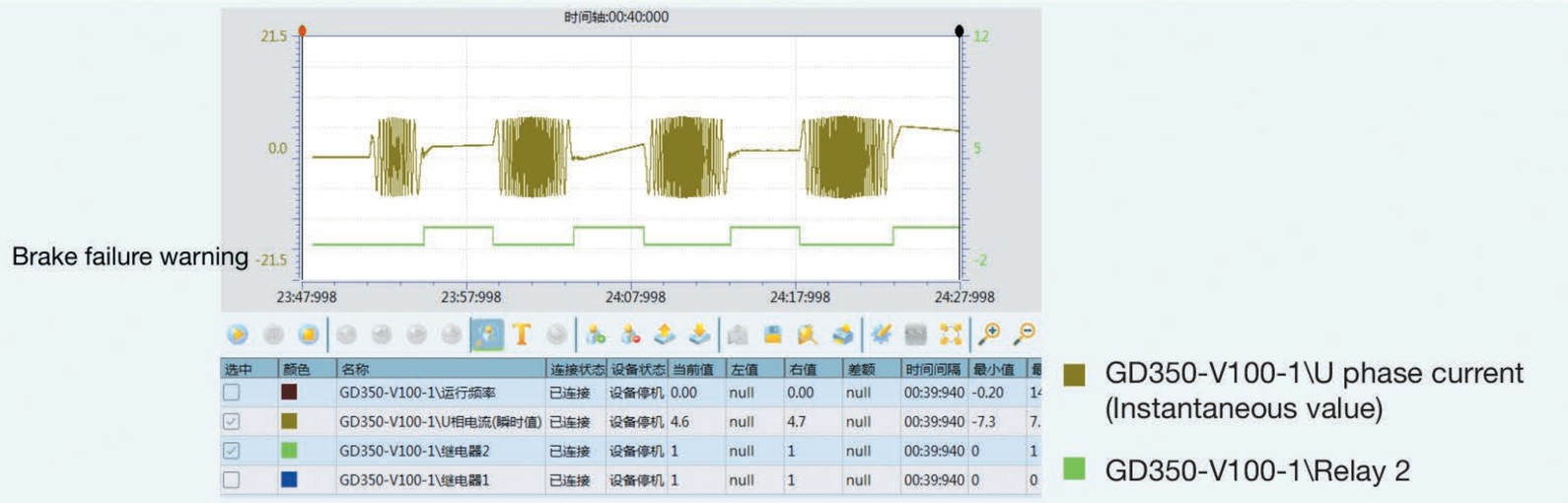

Fast brake

When the fast electric braking is effective, it can be controlled to stop near the target position during high-speed operation to improve efficiency. It can prevent the spreader from hitting the top and hanging the cabin, ensuring the safety of the crane.

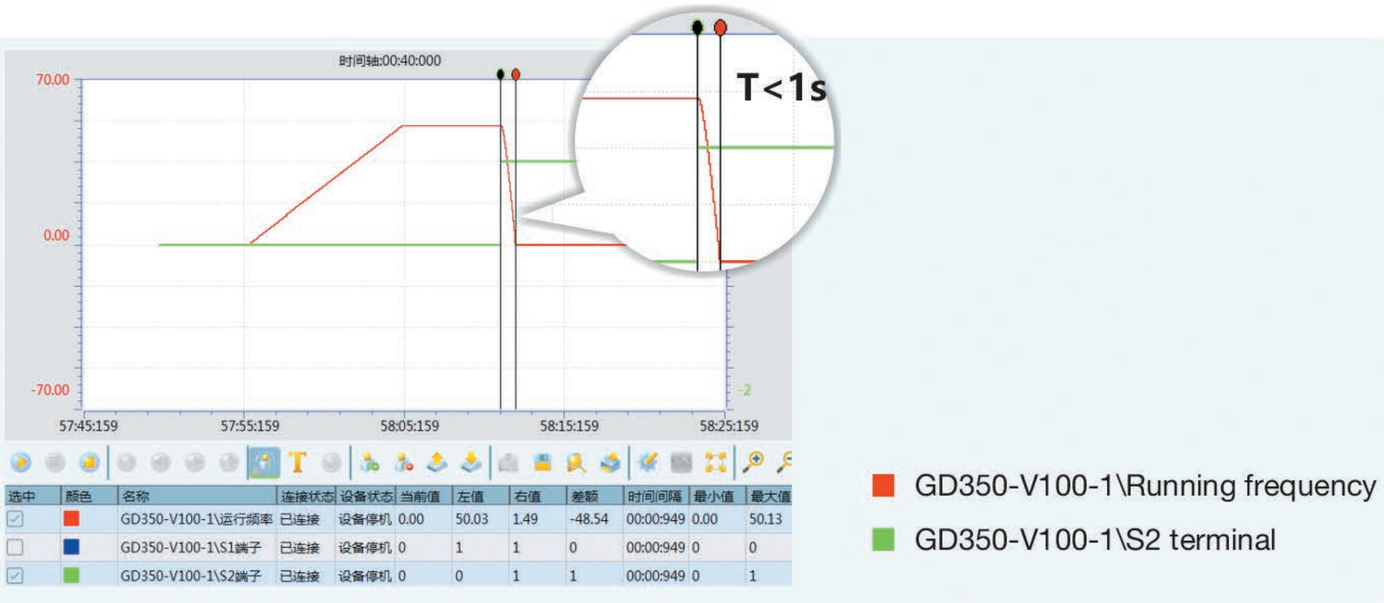

Safe torque off

When the motor stops, cut off the torque output to prevent accidental start of the equipment, reliable and safer; VFD is continuously powered, which can continue to monitor system status and recover quickly.

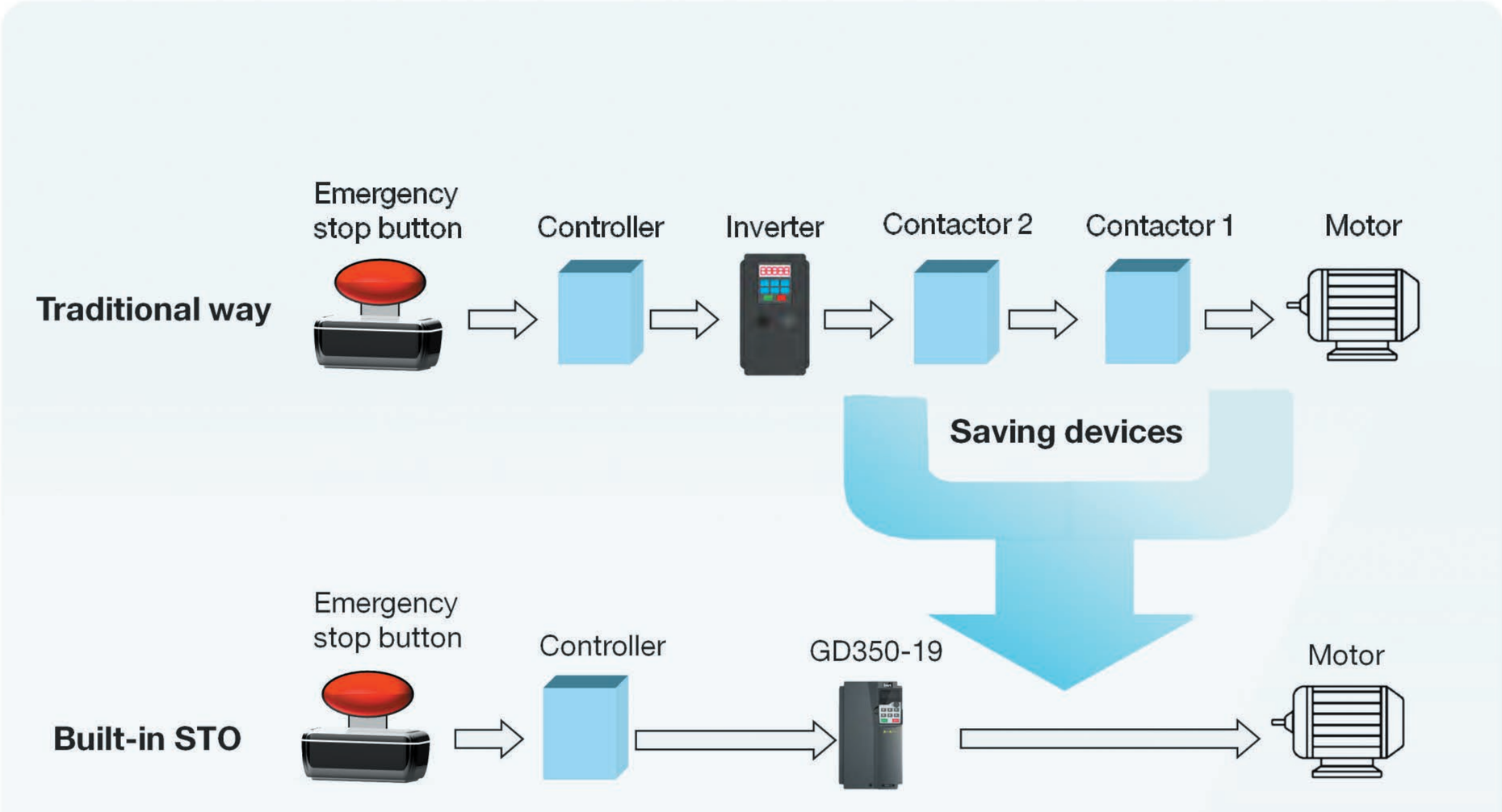

Note: Stop class corresponding to EN60204-1, CLASS SIL2.

Loose rope detection

Torque detection is carried out before lifting to avoid safety accidents caused by high speed lifting or speed lifting function miss-operation and rope failure under slack state.

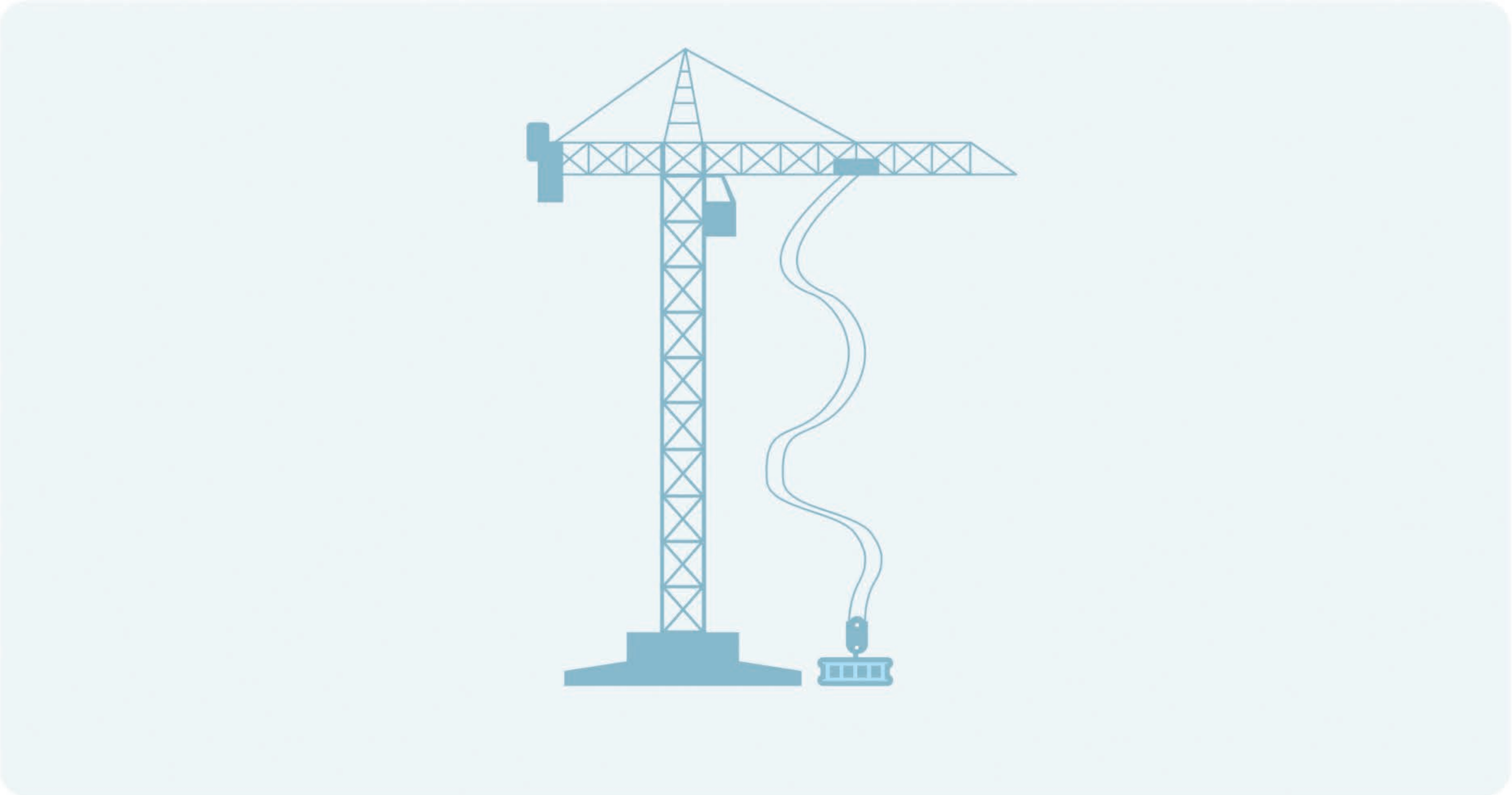

Travel limit

It integrates upper/lower limit and upper/lower deceleration limit functions to limit the operation of the crane within the specified range, ensuring safety while optimizing the shutdown mode and improving equipment efficiency.

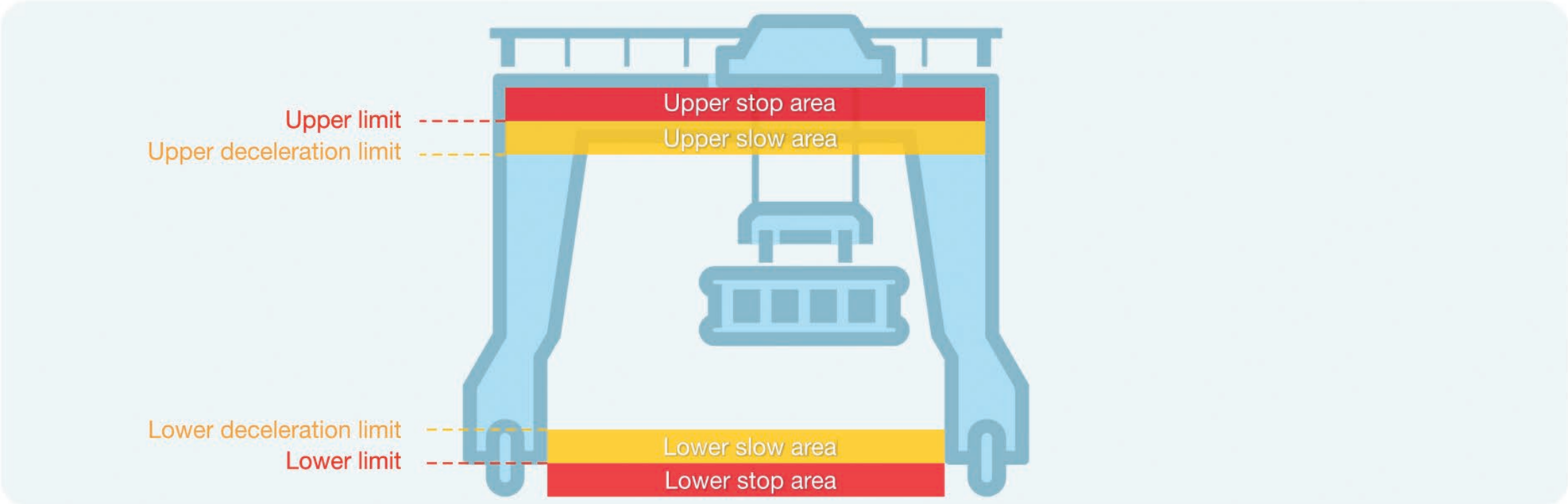

Overload protection

When the load weight exceeds the limit value of overload torque, limit the operation of the VFD to prevent the overload operation from causing danger.

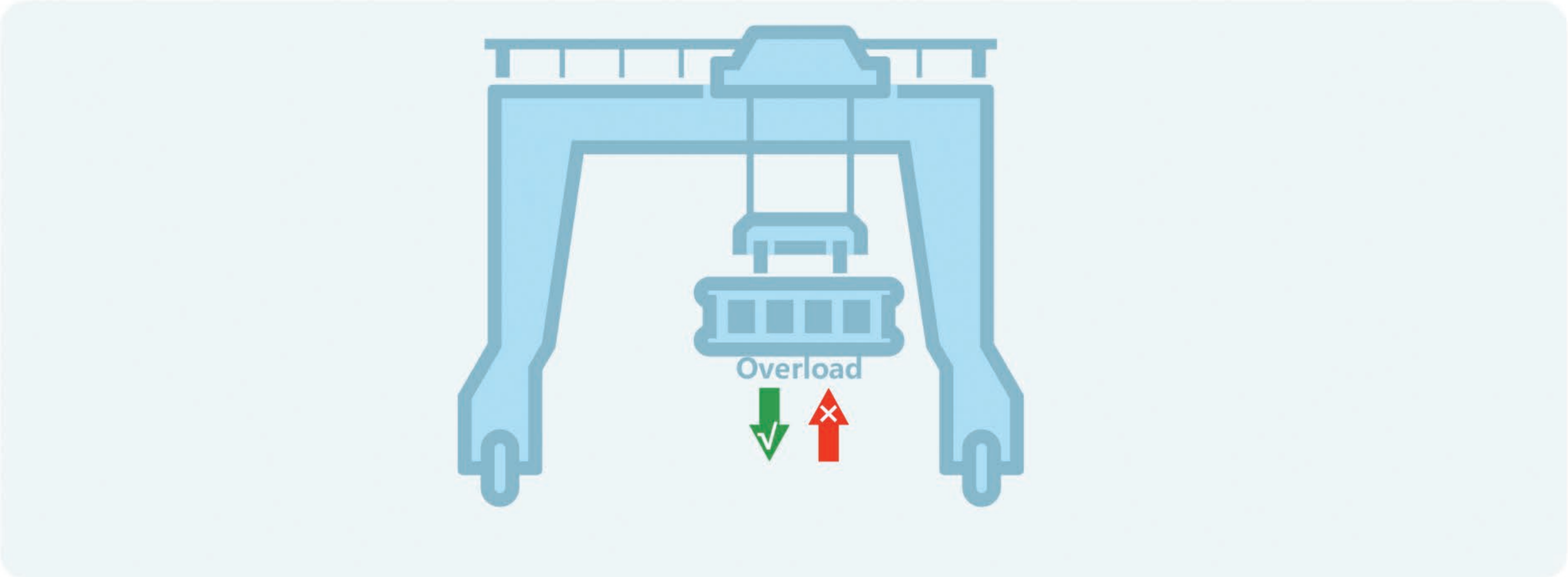

Ease of use

Anti-rocking function

Built-in anti-rocking function can effectively restrain the shaking of goods during translation and improve work efficiency.

Invalid

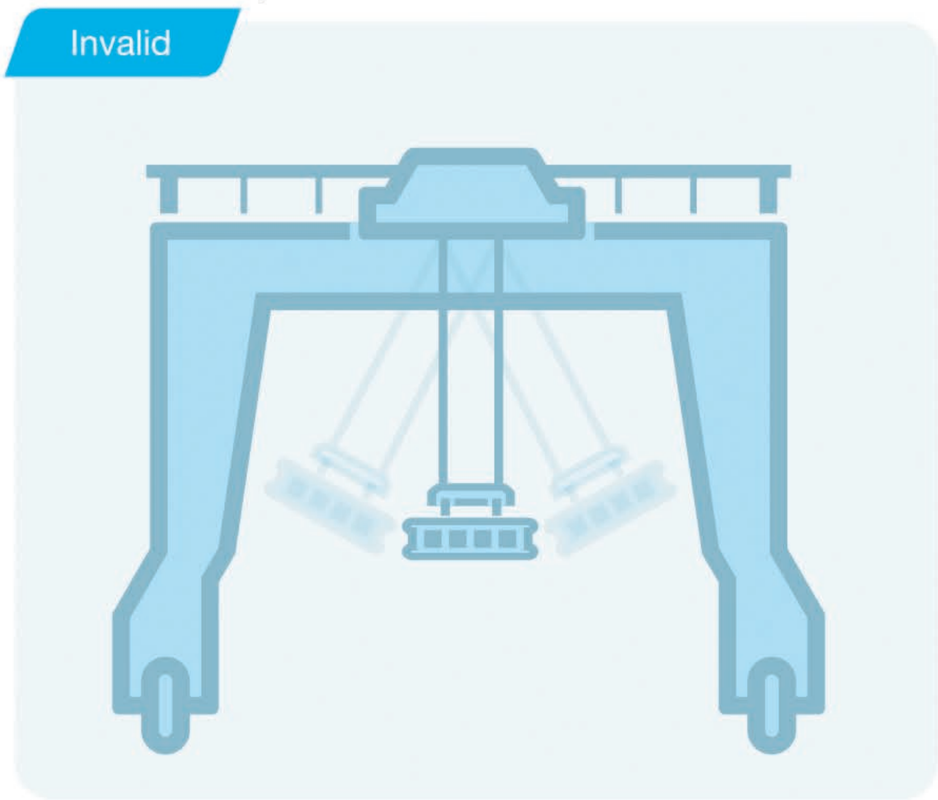

Valid

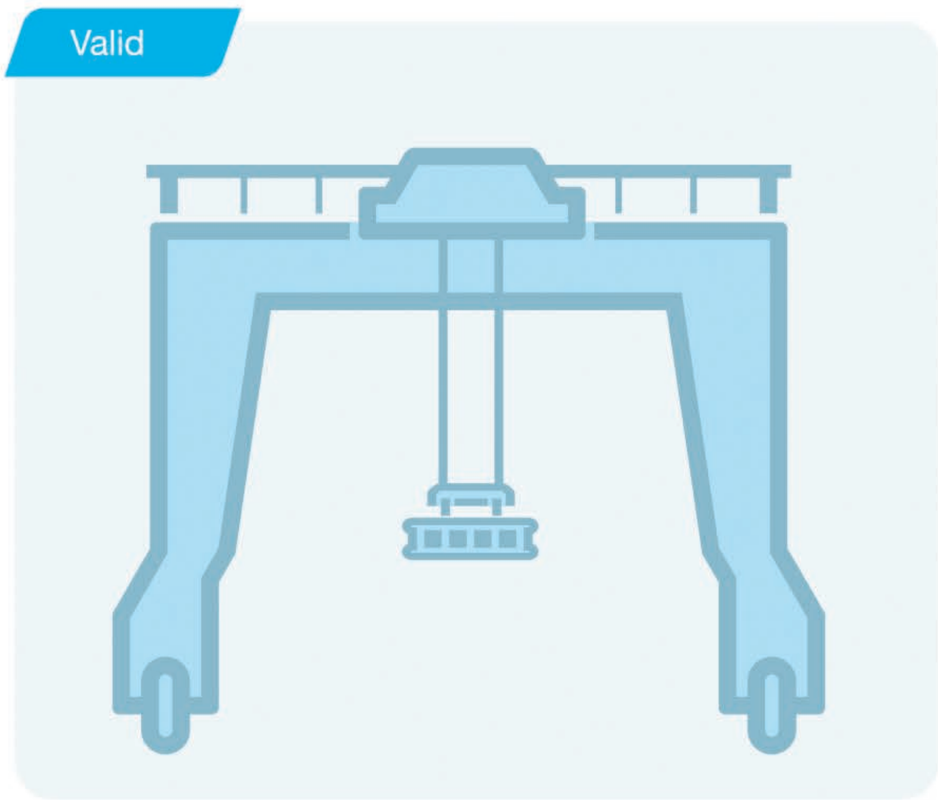

Fast setting

Integration of a variety of lifting macro application modes and support user customized macro, one key can complete the lifting, horizontal movement, construction hoist, tower crane rotating application parameter settings, easy to use.
When the encoder fails, the macro one-key switch to open loop control mode is applied to ensure the normal operation of the equipment

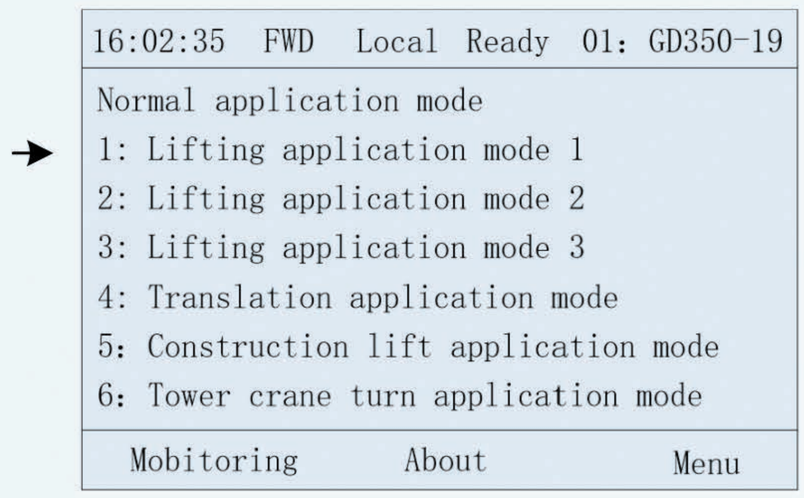

Light load speed up

Support constant power, step speed limit mode, according to the load to achieve the best speed matching, shorten the operation cycle of the crane, improve the operation efficiency.

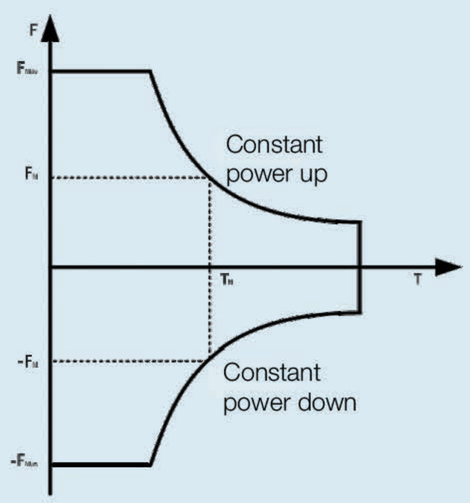

Constant power mode

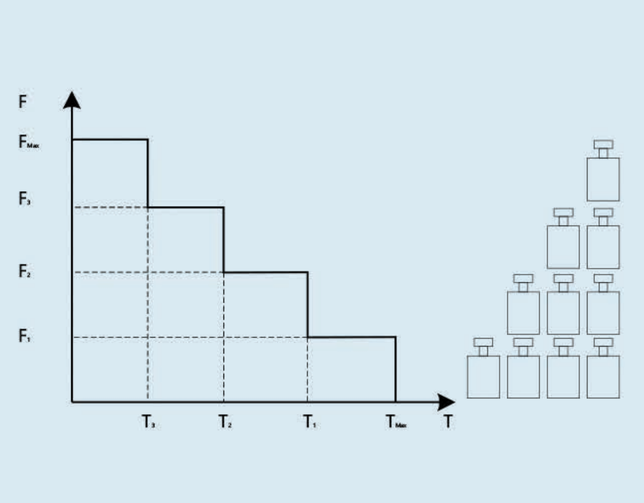

Step speed limit mode

Master/slave control

The power balance mode ensures the uniform output of the motor and meets the application demand of the same load driven by the rigid connection of multiple motors.
Speed synchronization mode, to ensure the synchronous lifting mechanism, to ensure safety;
Support one master and multiple slave, master and slave switch, flexible application.

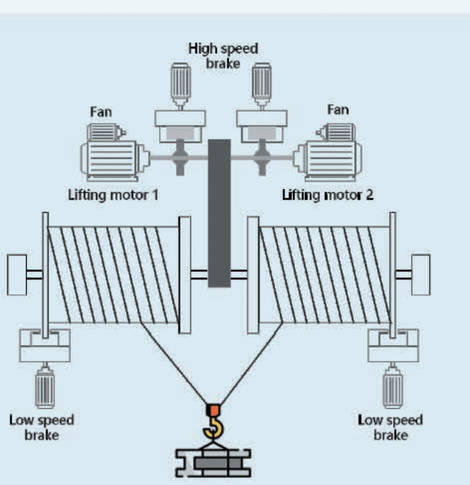

Power balance mode

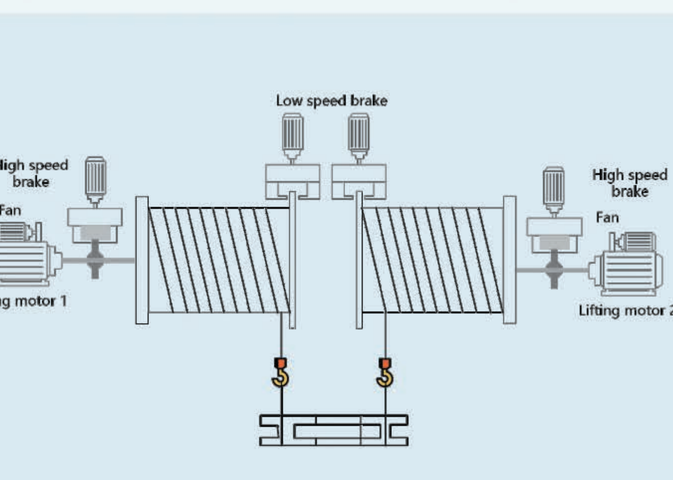

Speed synchronization mode

3 sets of motor parameter switch

It supports 3 sets of motor parameter storage, realizes the motor control of lifting, taxi and car by switching instructions, reduces the number of VFDs, and improves the competitiveness of users.

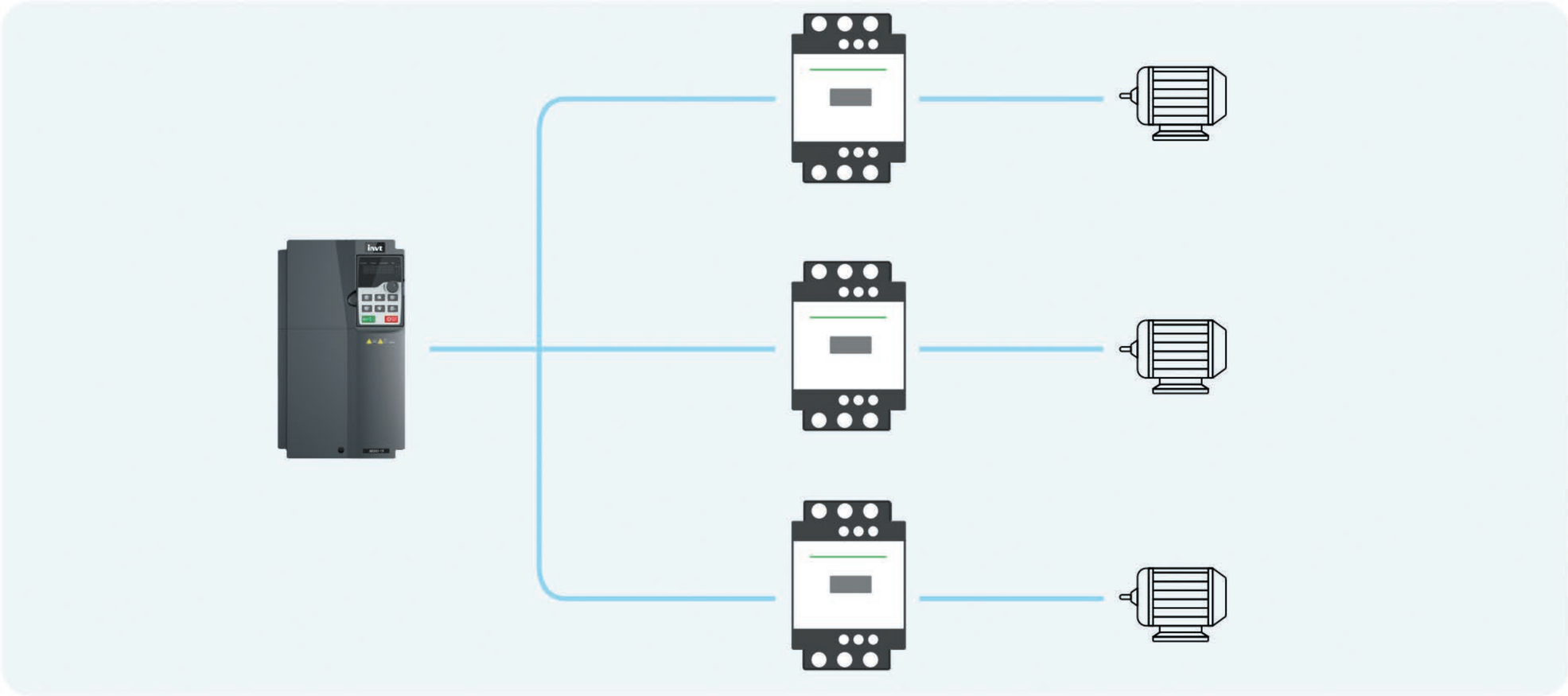

Hardware upgrade

110kW and below: built-in brake unit to improve system reliability and reduce customer cost.
18.5 ~ 110kW: built-in DC reactor to increase power factor.

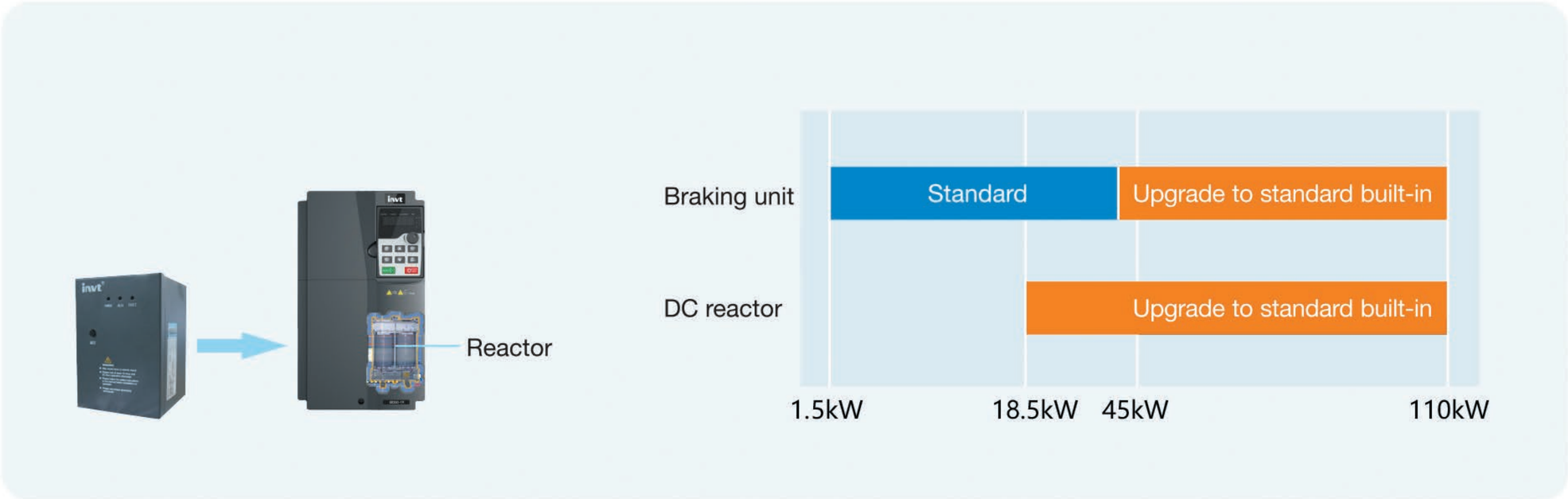

Cone rotor motor control

Adjust the flux according to the characteristics of the conical rotor motor, realize fast release and lock control, simplify debugging steps and ensure safety.

Load height measurement

The integrated coil diameter calculation function can output the hook height information to guide the driver to reduce the running speed and prevent the collision between the hook and the reel.

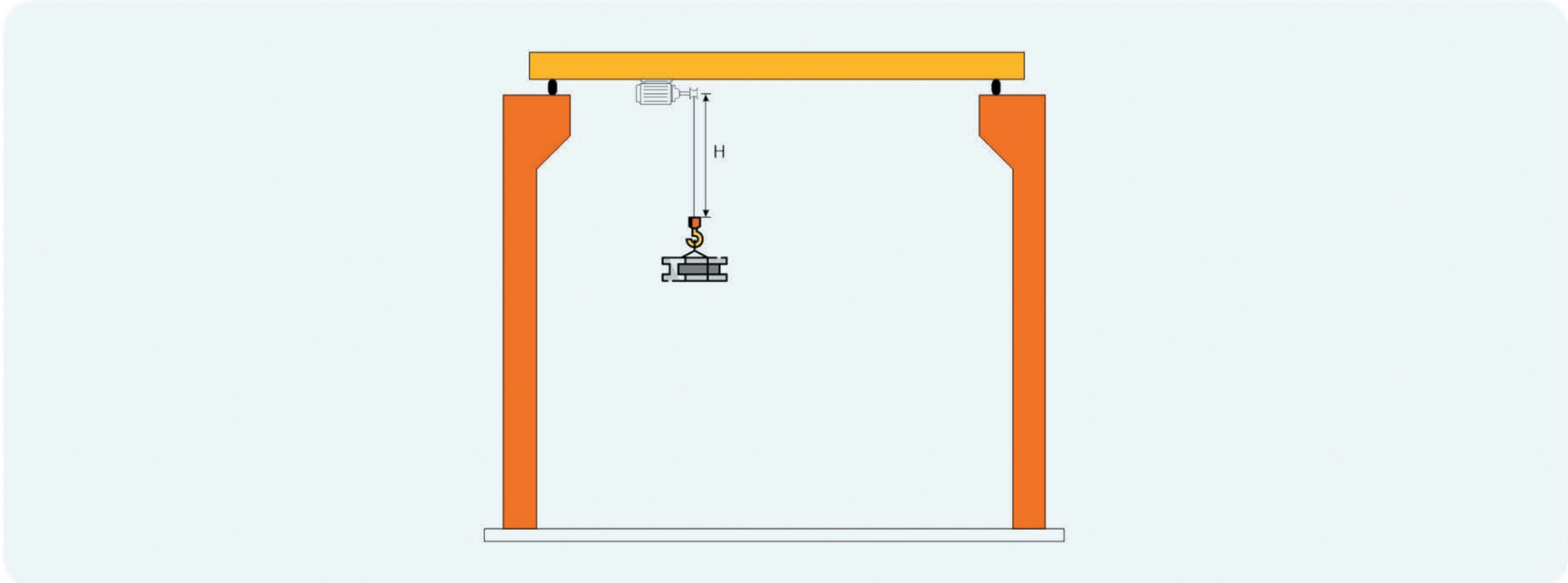

Position stop

Under the closed loop mode, it supports the position stop, which simplifies the driver operation and improves the crane operating efficiency.

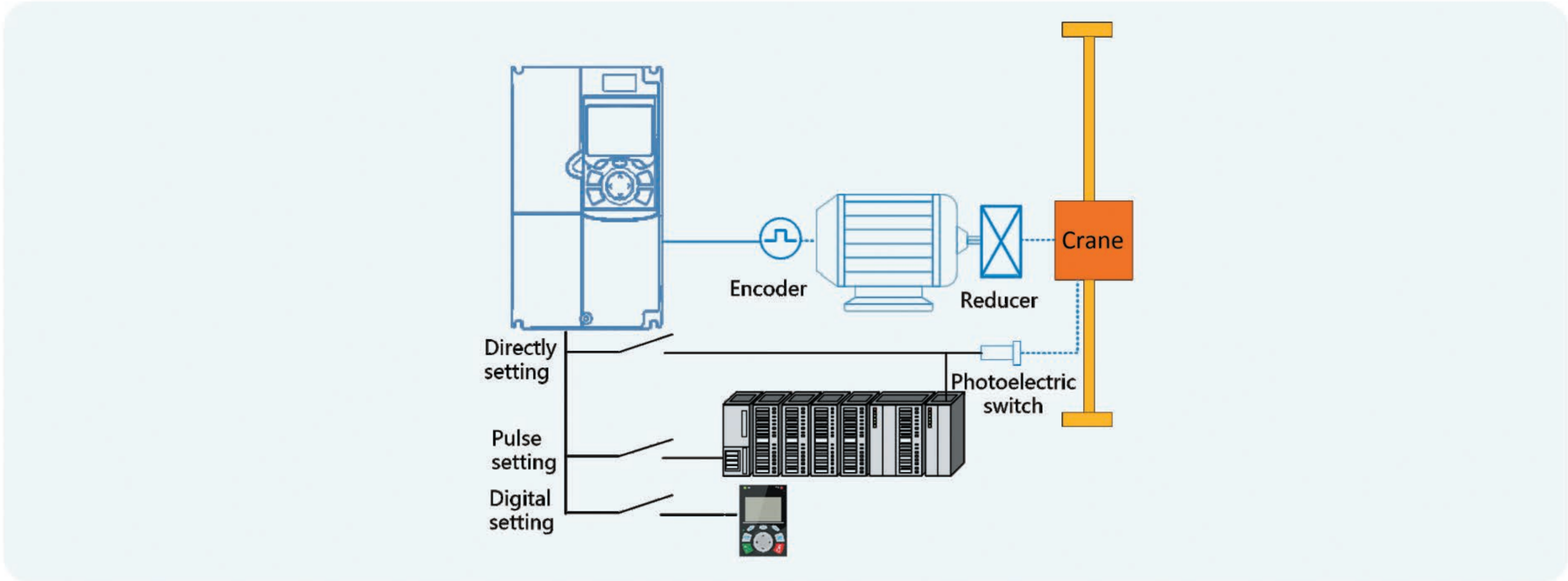

Multiply operation mode

Support joystick, remote control, electric potentiometer, graded joystick, graded remote control, communication and other speed settings to meet the needs of various lifting equipment applications.

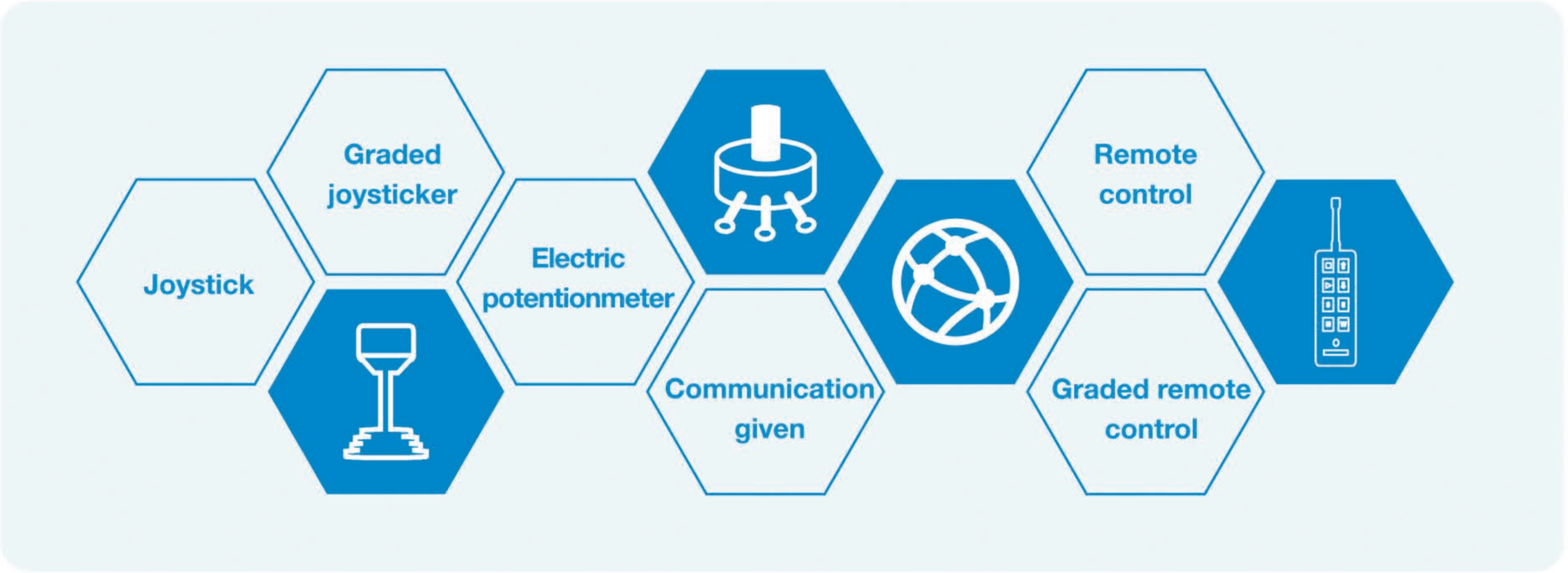

Smooth ACC and DEC

Through segmented acceleration and deceleration control, the problem of speed discontinuity in long swing arm applications is eliminated, and the swing arm is stable and without shaking.

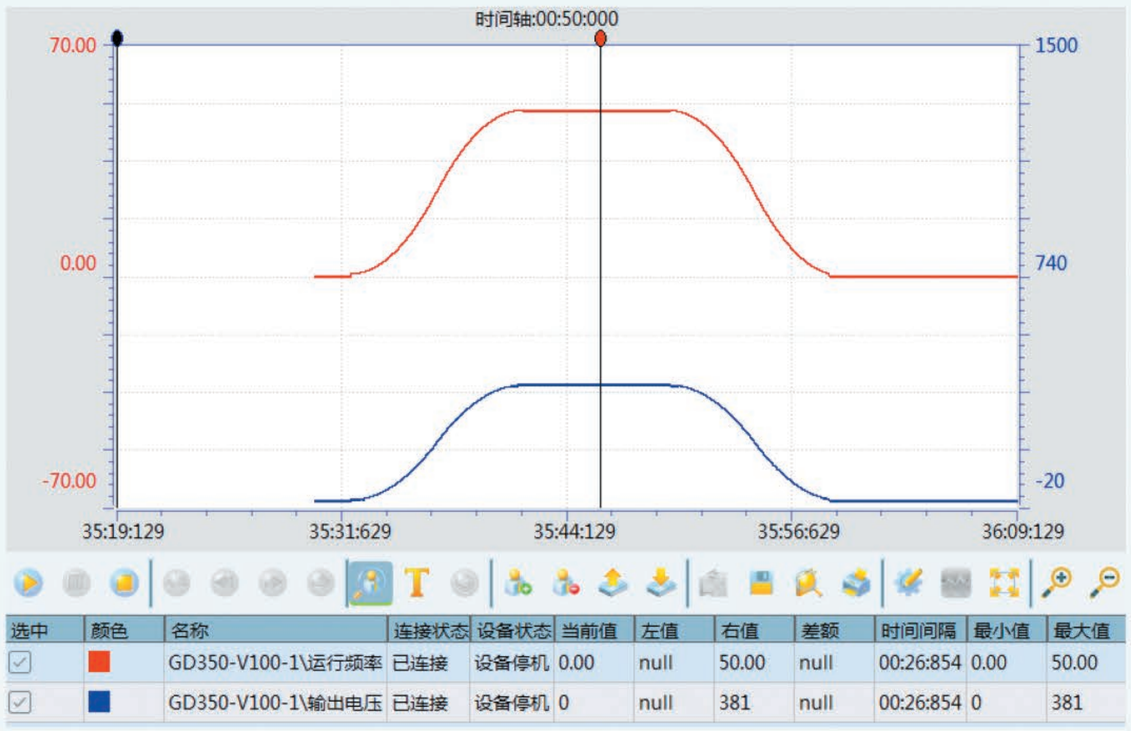

GD350-V100-1\Running frequency

GD350-V100-1\Output voltage

Rotating eddy current control

Support PWM eddy current modulation signal output, compared with the segmented given mode, eddy current voltage change continuity better, more stable control.

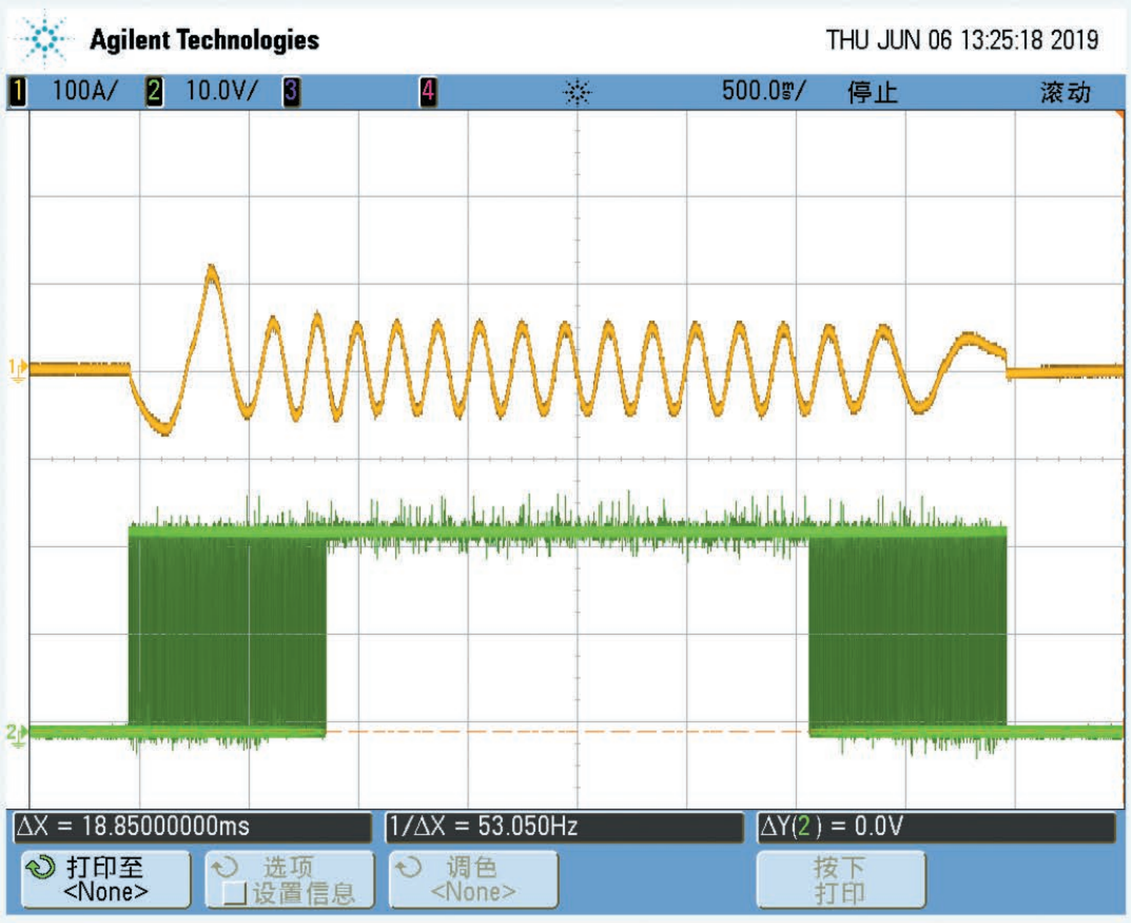

Graded remote control

Eddy current controlled signal output

Product Specification

	Function	Specification
Power output	Output frequency (Hz)	0~400Hz
	Carrier frequency (kHz)	1.0 ~ 15kHz
Technical control performance	Control mode	SVPWM control, SVC, and VC
	Motor type	Asynchronous motor (AM) and permanent magnetic synchronous motor (SM)
	Speed ratio	For AMs 1:200 (SVC) For SMs 1:20 (SVC) For AMs 1:1000 (VC)
	Speed control accuracy	±0.2% (SVC) ; ±0.02% (VC)
	Speed fluctuation	± 0.3% (SVC) ; ± 0.02% (VC)
	Torque response	<20ms (SVC) ; <10ms (VC)
	Torque control accuracy	10% (SVC) ; 5% (VC)
	Starting torque	For AMs: 0.25Hz/150% (SVC) For SMs: 2.5 Hz/150% (SVC) For AMs: 0Hz/200% (VC)
	Overload capacity	150% for 1 minute, 180% for 10 seconds, and 200% for 1second
Running control performancet	Frequency setting method	Settings can be implemented through digital, analog, pulse frequency, multi-step speed running, graded multi-step speed reference, simple PLC, PID, MODBUS communication, PROFIBUS communication and so on. Settings can be combined and the setting channels can be switched.
	Automatic voltage regulation	The output voltage can be kept constant although the grid voltage changes.
	Speed tracking restart	Start the rotating motor without impact and smoothly.
Peripheral interface	Analog input	Two inputs, 0–10V/0–20mA for AI1, -10–10V for AI2 Resolution ratio: no more than 20mV
	Analog output	1 output, AO1： 0~10V /0~20mA
	Digital input	4 regular inputs; max. frequency: 1kHz; internal impedance: 3.3kΩ Two high-speed inputs; max. frequency: 50kHz; Resolution ratio: no more than 2ms
	Digital output	1 high-speed pulse output; max. frequency: 50kHz 1 Y terminal open collector output
	Relay output	Two programmable relay outputs RO1A NO, RO1B NC, RO1C common terminal RO2A NO, RO2B NC, RO2C common terminal Contact capacity: 3A/250VAC, 1A/30VDC
	Communication interface	1 RS485, supporting Modbus protocol. 1 CAN, for synchronous control (Optional)
	Extension interface	3 extension interfaces: SLOT1, SLOT2, SLOT3 Extensible PG card, programmable extension card, communication card, I/O card, and so on
Protection function	Rectifier unit	More than 30 protection functions, such as protection against overcurrent, overvoltage, undervoltage, overtemperature, phase loss, and overload.
Others	Installation method	Wall mounting, floor mounting, or flange mounting
	Temperature of running environment	-10~50℃, derating is required if the ambient temperature exceeds 40°C.
	IP rating	IP20
	Pollution degree	Degree 2
	Cooling method	Force air cooling

Type Selection

GD350-19 – 037G – 4 – B

① ② ③ ④

No.	Description	Example
①	Abbreviation of product series	GD350-19: Goodrive350-19 series VFD for hoisting
②	Power range + load type	037: 37kW G: Constant torque load
③	Voltage class	4: AC 3PH 380V(-15%)~440V(+10%) 6: AC 3PH 520V(-15%)~690V(+10%)
④	Built-in braking unit	B: Built-in braking unit Empty: Not built-in braking unit

Power Ratings

Model	Rated output current (Kw)	Input current (A)	Output current (A)
GD350-19-1R5G-4-B	1.5	5.0	3.7
GD350-19-2R2G-4-B	2.2	5.8	5
GD350-19-004G-4-B	4	13.5	9.5
GD350-19-5R5G-4-B	5.5	19.5	14
GD350-19-7R5G-4-B	7.5	25	18.5
GD350-19-011G-4-B	11	32	25
GD350-19-015G-4-B	15	40	32
GD350-19-018G-4-B	18.5	47	38
GD350-19-022G-4-B	22	51	45
GD350-19-030G-4-B	30	70	60
GD350-19-037G-4-B	37	80	75
GD350-19-045G-4-B	45	98	92
GD350-19-055G-4-B	55	128	115
GD350-19-075G-4-B	75	139	150
GD350-19-090G-4-B	90	168	180
GD350-19-110G-4-B	110	201	215
GD350-19-132G-4	132	265	260
GD350-19-160G-4	160	310	305
GD350-19-185G-4	185	345	340
GD350-19-200G-4	200	385	380
GD350-19-220G-4	220	430	425
GD350-19-250G-4	250	460	480
GD350-19-280G-4	280	500	530
GD350-19-315G-4	315	580	600
GD350-19-350G-4	350	625	650
GD350-19-400G-4	400	715	720
GD350-19-500G-4	500	890	860

Model	Rated output current (Kw)	Input current (A)	Output current (A)
GD350-19-022G-6	22	35	27
GD350-19-030G-6	30	40	34
GD350-19-037G-6	37	47	42
GD350-19-045G-6	45	52	54
GD350-19-055G-6	55	65	62
GD350-19-075G-6	75	85	86
GD350-19-090G-6	90	95	95
GD350-19-110G-6	110	118	131
GD350-19-132G-6	132	145	147
GD350-19-160G-6	160	165	163
GD350-19-185G-6	185	190	198
GD350-19-200G-6	200	210	216
GD350-19-220G-6	220	230	240
GD350-19-250G-6	250	255	274
GD350-19-280G-6	280	286	300
GD350-19-315G-6	315	334	328
GD350-19-350G-6	355	360	380
GD350-19-400G-6	400	411	426
GD350-19-500G-6	500	518	540
GD350-19-560G-6	560	578	600
GD350-19-630G-6	630	655	680

Note:

1. The output current of VFD models is measured in cases when the output voltage is 380/660V.
2. The input current of VFD models is measured in cases when the input voltage is 380/660V.
3. Larger power rating can be achieved in parallel.

Extension Cards

Type	Model	Name	Specification
PG card	EC-PG507-12	Simplified incremental PG card	Applicable to 5V or 24V OC encoders Applicable to 5V or 12V push-pull encoders Applicable to 5 V differential encoders
	EC-PG505-12	Multifunction incremental PG card	Applicable to OC encoders of 5 V or 12 V Applicable to push-pull encoders of 5 V or 12 V Applicable to differential encoders of 5 V Supporting the orthogonal input of A, B, and Z Supporting the frequency-divided output of A, B, and Z Supporting pulse string setting
	EC-PG505-24	24V incremental PG card	Applicable to 24V OC encoders Applicable to 24V push-pull encoders Applicable to 24V differential encoders
	EC-PG504-00	Resolver PG card	Applicable to resolver encoders Supporting frequency-divided output of resolver-simulated A, B, Z
	EC-PG503-05	UVW incremental PG card	Applicable to differential encoders of 5 V Supporting the orthogonal input of A, B, and Z Supporting pulse input of phases U, V, and W Supporting frequency-divided output of A, B, and Z Supporting the input of pulse string reference
	EC-PG502	Sin/Cos PG card	Applicable to Sin/Cos encoders with or without CD signals Supporting pulse string reference input Max. 200kHz，supporting 5V differential input

Type	Model	Name	Specification
Communication card	EC-TX503D	Profibus-DP card	PROFIBUS protocol, 9.6kbps~12Mbps
	EC-TX509C	Profinet card	PROFINET protocol, supporting 100Mbpsfull duplex operation
	EC-TX505C	CAN multi-protocol cards	Support for CANopen protocols and INVT'S master-slave special protocols
	EC-TX501-1	Bluetooth card	Supporting Bluetooth 4.0 With INVT mobile app, you can set the parameters and monitor the states of the VFD through Bluetooth The maximum communication distance in open environments is 30 m. EC-TX501-1 is equipped with a built-in antenna and applicable to molded case machines. EC-TX501-2 is configured with an external sucker antenna and applicable to sheet metal machines.
	EC-TX501-2		
	EC-TX502-1	WIFI card	Meeting IEEE802.11b/g/n With INVT mobile app, you can monitor the VFD locally or remotely through WIFI communication The maximum communication distance in open environments is 30 m. EC-TX501-1 is equipped with a built-in antenna and applicable to molded case machines. EC-TX502-2 is configured with an external sucker antenna and applicable to sheet metal machines.
	EC-TX502-2		
	EC-TX504	Ethernet card	Supporting Ethernet communication with INVT internal protocol Can be used in combination with INVT upper computer monitoring software INVT Studio Support upper computer software INVT Workshop
I/O extension card	EC-PC501-00	I/O extension card 1	4 digital inputs 1 digital output 1 analog input 1 analog output 2 relay outputs: 1 double-contact output, and 1 single-contact output
	EC-PC502-00	I/O extension card 2	4 digital inputs 1 PT100 1 PT1000 2 relay outputs: single-contact NO output Note: standard for 7.5kW and above

Optional Parts

Name	Picture	Applicaiton
LCD keypad		All
Keypad external bracket	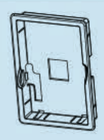	All
Flange installation	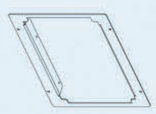	380V: 1.5~90kW 660V: 22~132kW
Installation base	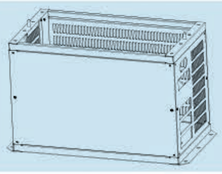	An input reactor (or DC reactor) and an output reactor can be built into the base. 380V: 220~315kW 660V:250~350kW

Reactor & Filter Selection

AC 3PH 380V(-15%)~440V(+10%)

Model	Reactor			Filter	
	Input reactor	DC reactor	Output reactor	Input filter	Output filter
GD350-19-1R5G-4-B	ACL2-1R5-4	-	OCL2-1R5-4	FLT-P04006L-B	FLT-L04006L-B
GD350-19-2R2G-4-B	ACL2-2R2-4	-	OCL2-2R2-4		
GD350-19-004G-4-B	ACL2-004-4	-	OCL2-004-4	FLT-P04016L-B	FLT-L04016L-B
GD350-19-5R5G-4-B	ACL2-5R5-4	-	OCL2-5R5-4		
GD350-19-7R5G-4-B	ACL2-7R5-4	-	OCL2-7R5-4	FLT-P04032L-B	FLT-L04032L-B
GD350-19-011G-4-B	ACL2-011-4	-	OCL2-011-4		
GD350-19-015G-4-B	ACL2-015-4	-	OCL2-015-4	FLT-P04045L-B	FLT-L04045L-B
GD350-19-018G-4-B	ACL2-018-4	Standard	OCL2-018-4		
GD350-19-022G-4-B	ACL2-022-4	Standard	OCL2-022-4	FLT-P04065L-B	FLT-L04065L-B
GD350-19-030G-4-B	ACL2-037-4	Standard	OCL2-037-4		
GD350-19-037G-4-B	ACL2-037-4	Standard	OCL2-037-4	FLT-P04100L-B	FLT-L04100L-B
GD350-19-045G-4-B	ACL2-045-4	Standard	OCL2-045-4		
GD350-19-055G-4-B	ACL2-055-4	Standard	OCL2-055-4	FLT-P04150L-B	FLT-L04150L-B
GD350-19-075G-4-B	ACL2-075-4	Standard	OCL2-075-4		
GD350-19-090G-4-B	ACL2-110-4	Standard	OCL2-110-4	FLT-P04240L-B	FLT-L04240L-B
GD350-19-110G-4-B	ACL2-110-4	Standard	OCL2-110-4		
GD350-19-132G-4	ACL2-160-4	DCL2-132-4	OCL2-200-4		
GD350-19-160G-4	ACL2-160-4	DCL2-160-4	OCL2-200-4	FLT-P04400L-B	FLT-L04400L-B
GD350-19-185G-4	ACL2-200-4	DCL2-200-4	OCL2-200-4		
GD350-19-200G-4	ACL2-200-4	DCL2-220-4	OCL2-200-4		
GD350-19-220G-4	ACL2-280-4	DCL2-280-4	OCL2-280-4	FLT-P04600L-B	FLT-L04600L-B
GD350-19-250G-4	ACL2-280-4	DCL2-280-4	OCL2-280-4		
GD350-19-280G-4	ACL2-280-4	DCL2-280-4	OCL2-280-4		
GD350-19-315G-4	ACL2-350-4	DCL2-315-4	OCL2-350-4	FLT-P04800L-B	FLT-L04800L-B
GD350-19-355G-4	Standard	DCL2-400-4	OCL2-350-4		
GD350-19-400G-4	Standard	DCL2-400-4	OCL2-400-4		
GD350-19-450G-4	Standard	DCL2-500-4	OCL2-500-4	FLT-P041000L-B	FLT-L041000L-B
GD350-19-500G-4	Standard	DCL2-500-4	OCL2-500-4		

AC 3PH 520V(-15%)~690V(+10%)

Model	Reactor			Filter	
	Input reactor	DC reactor	Output reactor	Input filter	Output filter
GD350-19-022G-6	ACL2-030-6	DCL2-030-6	OCL2-030-6	FLT-P06050H-B	FLT-L06050H-B
GD350-19-030G-6	ACL2-030-6	DCL2-030-6	OCL2-030-6		
GD350-19-037G-6	ACL2-055-6	DCL2-055-6	OCL2-055-6		
GD350-19-045G-6	ACL2-055-6	DCL2-055-6	OCL2-055-6	FLT-P06100H-B	FLT-L06100H-B
GD350-19-055G-6	ACL2-055-6	DCL2-055-6	OCL2-055-6		
GD350-19-075G-6	ACL2-110-6	DCL2-110-6	OCL2-110-6		
GD350-19-090G-6	ACL2-110-6	DCL2-110-6	OCL2-110-6		
GD350-19-110G-6	ACL2-110-6	DCL2-110-6	OCL2-110-6	FLT-P06200H-B	FLT-L06200H-B
GD350-19-132G-6	ACL2-185-6	DCL2-185-6	OCL2-185-6		
GD350-19-160G-6	ACL2-185-6	DCL2-185-6	OCL2-185-6		
GD350-19-185G-6	ACL2-185-6	DCL2-185-6	OCL2-185-6		
GD350-19-200G-6	ACL2-250-6	DCL2-250-6	OCL2-250-6	FLT-P06300H-B	FLT-L06300H-B
GD350-19-220G-6	ACL2-250-6	DCL2-250-6	OCL2-250-6		
GD350-19-250G-6	ACL2-250-6	DCL2-250-6	OCL2-250-6		
GD350-19-280G-6	ACL2-350-6	DCL2-350-6	OCL2-350-6		
GD350-19-315G-6	ACL2-350-6	DCL2-350-6	OCL2-350-6	FLT-P06400H-B	FLT-L06400H-B
GD350-19-355G-6	ACL2-350-6	DCL2-350-6	OCL2-350-6		

Model	Reactor			Filter	
	Input reactor	DC reactor	Output reactor	Input filter	Output filter
GD350-19-400G-6	Standard	DCL2-400-6	OCL2-400-6	FLT-P061000H-B	FLT-P061000H-B
GD350-19-450G-6	Standard	DCL2-560-6	OCL2-560-6		
GD350-19-500G-6	Standard	DCL2-560-6	OCL2-560-6		
GD350-19-560G-6	Standard	DCL2-560-6	OCL2-560-6		
GD350-19-630G-6	Standard	DCL2-630-6	OCL2-630-6		

Brake System Selection

AC 3PH 380V(-15%)~440V(+10%)

Model	Braking unit			Braking resistor			
	model	Continuous braking current (A)	Peak braking current (A)	100% braking torque(Ω)	Min. power recommended for lifting (kW)	Min. power recommended for translation (kW)	Min. allowable resistor (Ω)
GD350-19-1R5G-4-B	Built in	4	4.8	326	≥0.75	≥0.4	170
GD350-19-2R2G-4-B	Built in	5.4	6.5	222	≥1.1	≥0.5	130
GD350-19-004G-4-B	Built in	8.8	10.5	122	≥2	≥1	80
GD350-19-5R5G-4-B	Built in	11.6	14	89	≥2.8	≥1.4	60
GD350-19-7R5G-4-B	Built in	14.9	17.8	65	≥3.8	≥1.9	47
GD350-19-011G-4-B	Built in	22.6	27	44	≥5.5	≥2.8	31
GD350-19-015G-4-B	Built in	30.4	36.5	32	≥7.5	≥3.8	23
GD350-19-018G-4-B	Built in	36.8	44.2	27	≥9	≥4.5	19
GD350-19-022G-4-B	Built in	41	49.4	22	≥11	≥5.5	17
GD350-19-030G-4-B	Built in	54	65	17	≥15	≥7.5	13
GD350-19-037G-4-B	Built in	63.6	76.4	13	≥18.5	≥9	11
GD350-19-045G-4-B	Built in	80	96	10	≥22.5	≥11	8.8
GD350-19-055G-4-B	Built in	100	120	8	≥27.5	≥13	7
GD350-19-075G-4-B	Built in	110	132	6.5	≥37	≥18	6.4
GD350-19-090G-4-B	Built in	160	190	5.4	≥45	≥22	4.4
GD350-19-110G-4-B	Built in	220	260	4.5	≥55	≥27	3.2
GD350-19-132G-4	DBU100H-220-4			3.7	≥66	≥33	3.2
GD350-19-160G-4	DBU100H-320-4			3.1	≥80	≥40	2.2
GD350-19-185G-4				2.8	≥92	≥46	
GD350-19-200G-4				2.5	≥100	≥50	
GD350-19-220G-4	DBU100H-400-4			2.2	≥110	≥55	1.8
GD350-19-250G-4				2	≥125	≥62	
GD350-19-280G-4	DBU100H-320-4*2			3.6*2	≥70*2	≥35*2	2.2*2
GD350-19-315G-4				3.2*2	≥80*2	≥40*2	
GD350-19-355G-4				2.8*2	≥90*2	≥45*2	
GD350-19-400G-4				2.4*2	≥100*2	≥50*2	
GD350-19-450G-4	DBU100H-400-4*2			2.2*2	≥115*2	≥57*2	1.8*2
GD350-19-500G-4				2.0*2	≥125*2	≥62*2	

AC 3PH 520V(-15%)~690V(+10%)

Model	Braking unit	Braking resistor			
	model	100% braking torque(Ω)	Min. power recommended for lifting (kW)	Min. power recommended for translation (kW)	Min. allowable resistor (Ω)
GD350-19-022G-6	DBU100H-110-6	55	11	5.5	10
GD350-19-030G-6		40.3	15	7.5	
GD350-19-037G-6		32.7	18.5	9	
GD350-19-045G-6		26.9	23	11.5	
GD350-19-055G-6		22	27.5	13.5	
GD350-19-075G-6		16.1	37.5	19	
GD350-19-090G-6		13.4	45	22	
GD350-19-110G-6		11	55	27.5	
GD350-19-132G-6	DBU100H-160-6	9.2	66	33	6.9
GD350-19-160G-6		7.6	80	40	

Model	Braking unit	Braking resistor			
	model	100% braking torque(Ω)	Min. power recommended for lifting (kW)	Min. power recommended for translation (kW)	Min. allowable resistor (Ω)
GD350-19-185G-6	DBU100H-220-6	6.5	93	46	5
GD350-19-200G-6		6.1	100	50	
GD350-19-220G-6		5.5	110	55	
GD350-19-250G-6	DBU100H-320-6	4.8	125	62	3.4
GD350-19-280G-6		4.3	140	70	
GD350-19-315G-6		3.8	158	78	
GD350-19-355G-6	DBU100H-400-6	3.5	178	89	2.8
GD350-19-400G-6		3	200	100	
GD350-19-450G-6	DBU100H-320-6*2	5.5*2	112*2	56*2	3.4*2
GD350-19-500G-6		4.8*2	125*2	63*2	
GD350-19-560G-6		4.3*2	140*2	70*2	
GD350-19-630G-6		3.8*2	315*2	158*2	

Regeneration Feedback Unit Selection

The following lists the mapping between the 380V VFD models, buffering unit models, and regenerative feedback unit models.

AC 3PH 380V(-15%)~440V(+10%)

Model	Buffering unit	Regenerative feedback unit
GD350-19-022G-4-B	BUB-110-4	RBU100H-022-4
GD350-19-030G-4-B		RBU100H-030-4
GD350-19-037G-4-B		RBU100H-045-4
GD350-19-045G-4-B		RBU100H-045-4
GD350-19-055G-4-B		RBU100H-055-4
GD350-19-075G-4-B		RBU100H-090-4
GD350-19-090G-4-B		RBU100H-090-4
GD350-19-110G-4-B	BUB-250-4	RBU100H-110-4
GD350-19-132G-4		RBU100H-132-4
GD350-19-160G-4		RBU100H-160-4
GD350-19-185G-4		RBU100H-200-4
GD350-19-200G-4	BUB-250-4*2	RBU100H-200-4
GD350-19-220G-4		RBU100H-250-4
GD350-19-250G-4		RBU100H-250-4
GD350-19-280G-4		RBU100H-160-4*2
GD350-19-315G-4		RBU100H-160-4*2
GD350-19-355G-4		RBU100H-200-4*2
GD350-19-400G-4	BUB-250-4*2	RBU100H-200-4*2
GD350-19-450G-4		RBU100H-250-4*2
GD350-19-500G-4		RBU100H-250-4*2

The following lists the mapping between the 660V VFD models, buffering unit models, andregenerative feedback unit models.

AC 3PH 520V(-15%)~690V(+10%)

Model	Buffering unit	Regenerative feedback unit
GD350-19-022G-6	BUB-160-6	RBU100H-055-6
GD350-19-030G-6		RBU100H-055-6
GD350-19-037G-6		RBU100H-055-6
GD350-19-045G-6		RBU100H-055-6
GD350-19-055G-6		RBU100H-055-6
GD350-19-075G-6		RBU100H-090-6
GD350-19-090G-6		RBU100H-090-6
GD350-19-110G-6		RBU100H-160-6
GD350-19-132G-6		RBU100H-160-6
GD350-19-160G-6		RBU100H-160-6

Model	Buffering unit	Regenerative feedback unit
GD350-19-185G-6	BUB-400-6	RBU100H-200-6
GD350-19-200G-6		RBU100H-200-6
GD350-19-220G-6		RBU100H-315-6
GD350-19-250G-6		RBU100H-315-6
GD350-19-280G-6		RBU100H-315-6
GD350-19-315G-6		RBU100H-315-6
GD350-19-355G-6		RBU100H-400-6
GD350-19-400G-6	BUB-400-6*2	RBU100H-400-6
GD350-19-450G-6		RBU100H-315-6*2
GD350-19-500G-6		RBU100H-315-6*2
GD350-19-560G-6		RBU100H-315-6*2
GD350-19-630G-6		RBU100H-315-6*2

Product Dimension

AC 3PH 380V(-15%) – 440V(+10%) VFD dimensions

Wall-mounting dimensions

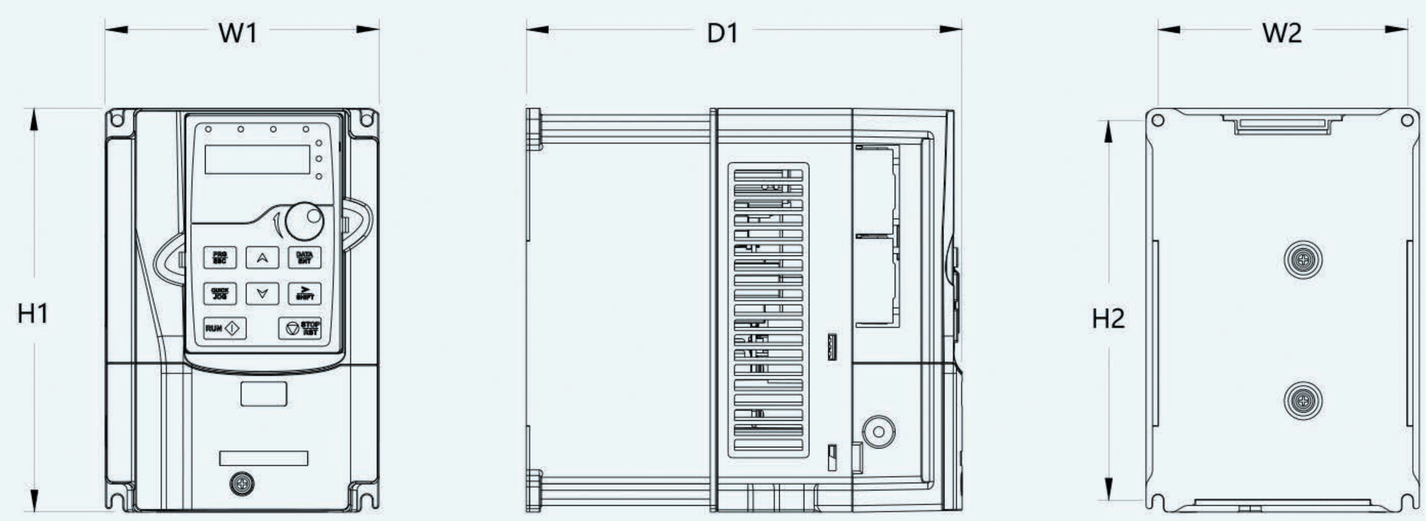

380V 1.5-37kW VFD wall mounting diagram

Model	Outline dimensions (mm)			Hole distance (mm)		Hole diameter (mm)	Screw	Net weight (kg)	Gross weight (kg)
	W1	H1	D1	W2	H2				
1.5kW-2.2kW	126	186	185	115	175	5	M4	2	3
4kW-5.5kW	126	186	201	115	175	5	M4	2.5	3.5
7.5kW	146	256	192	131	243.5	6	M5	3	4
11kW-15kW	170	320	220	151	303.5	6	M5	6	7
18.5kW-22kW	200	340.6	208	185	328.6	6	M5	8.5	10.5
30kW-37kW	250	400	223	230	380	6	M5	16	17

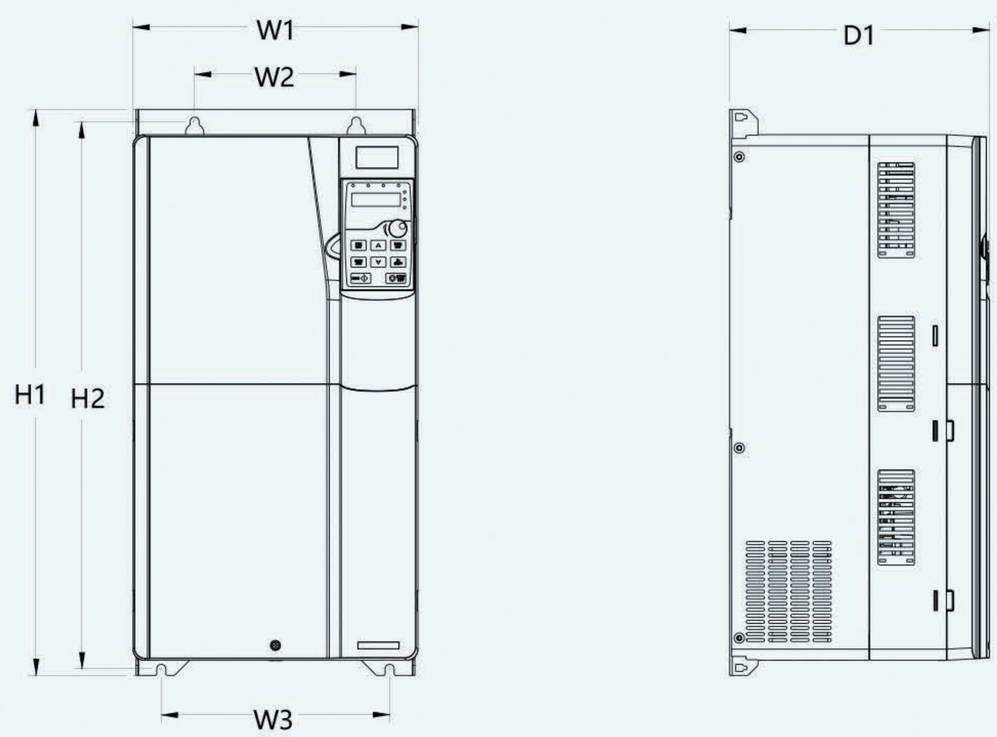

380V 45-75kW VFD wall mounting diagram

Model	Outline dimensions (mm)			Hole distance (mm)			Hole diameter (mm)	Screw	Net weight (kg)	Gross weight (kg)
	W1	H1	D1	W2	W3	H2				
45kW-75kW	282	560	258	160	226	542	9	M8	25	29

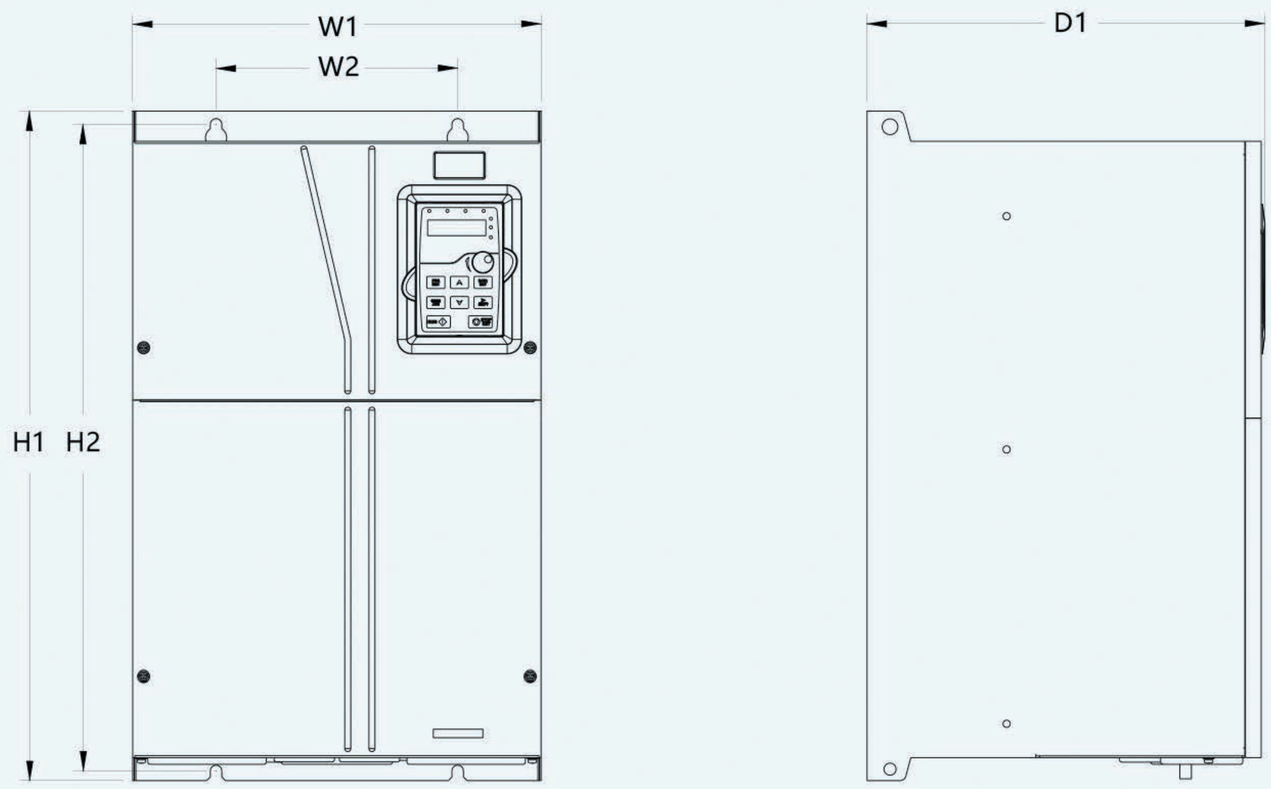

380V 90-110kW VFD wall mounting diagram

Model	Outline dimensions (mm)			Hole distance (mm)		Hole diameter (mm)	Screw	Net weight (kg)	Gross weight (kg)
	W1	H1	D1	W2	H2				
90kW-110kW	338	554	330	200	535	10	M8	41	52

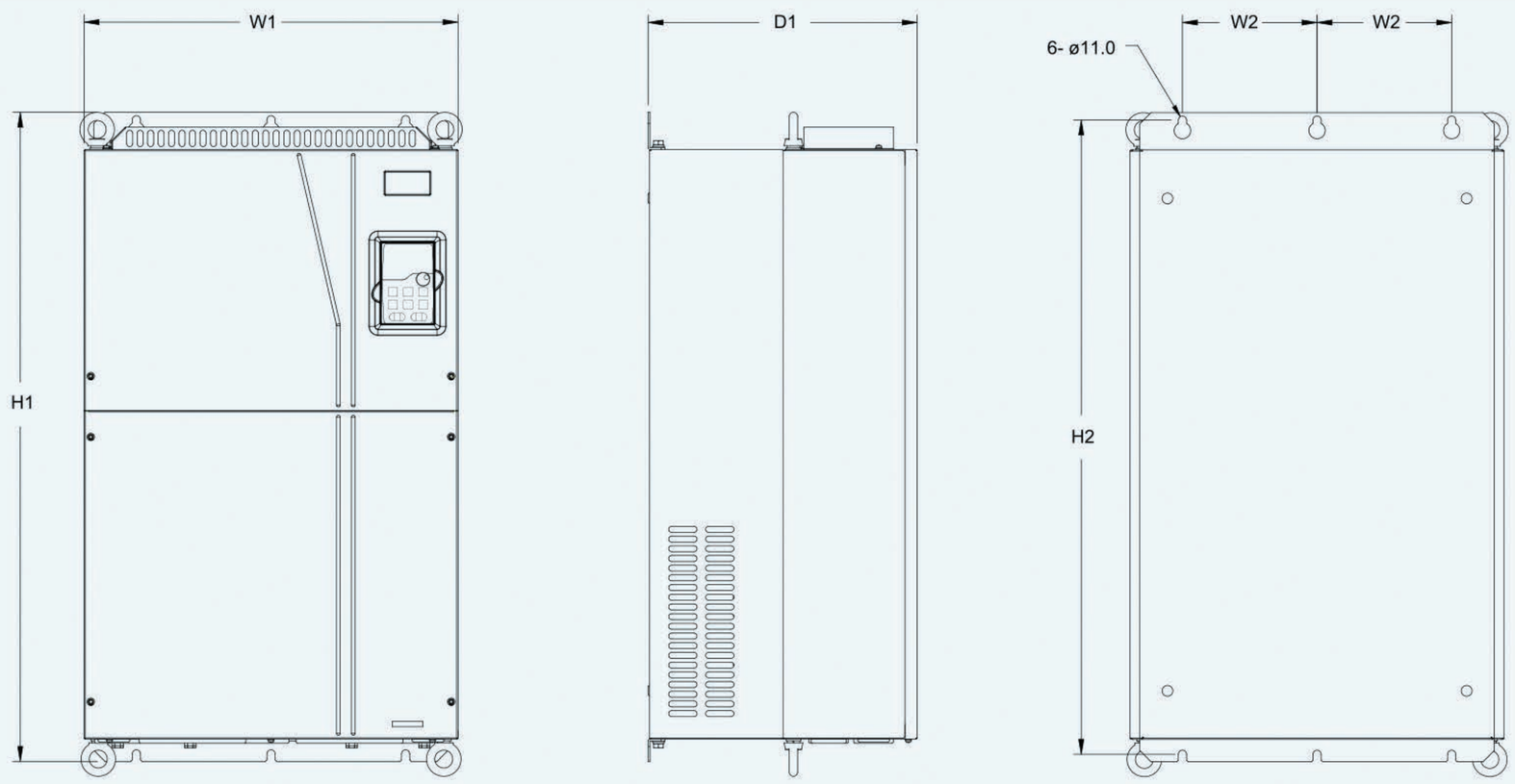

380V 132-200kW VFD wall mounting diagram

Model	Outline dimensions (mm)			Hole distance (mm)		Hole diameter (mm)	Screw	Net weight (kg)	Gross weight (kg)
	W1	H1	D1	W2	H2				
132kW-200kW	500	870	360	180	850	11	M10	85	110

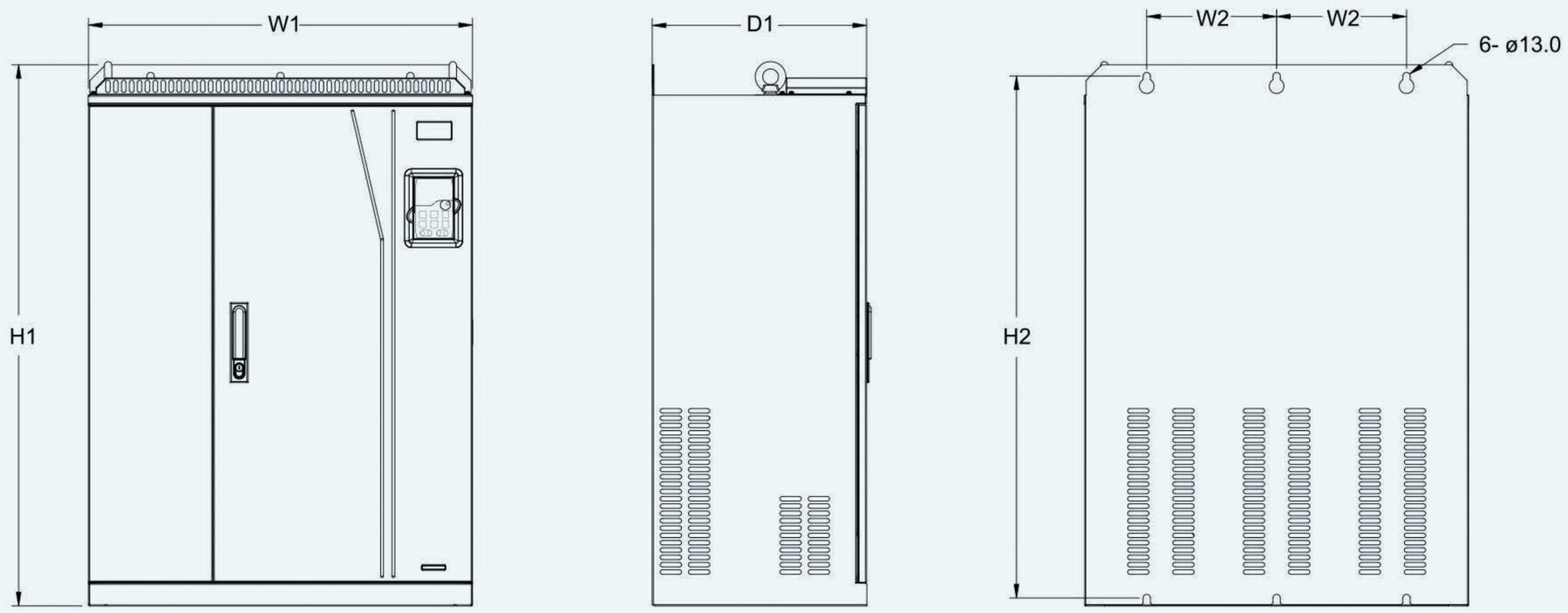

380V 220-315kW VFD wall mounting diagram

Model	Outline dimensions (mm)			Hole distance (mm)		Hole diameter (mm)	Screw	Net weight (kg)	Gross weight (kg)
	W1	H1	D1	W2	H2				
220kW-315kW	680	960	380	230	926	13	M12	135	165

Flange installation dimensions

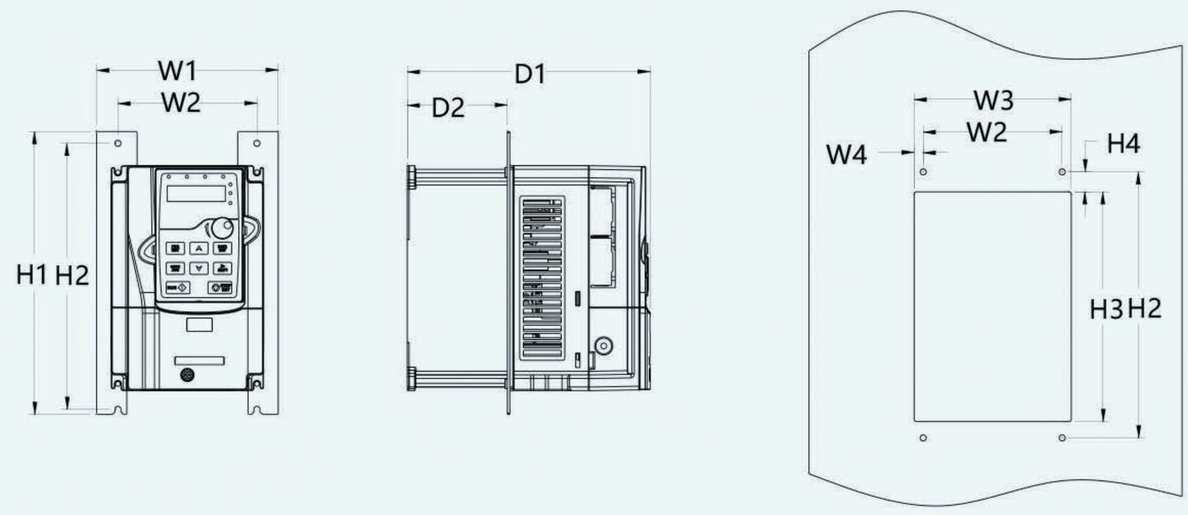

380V 1.5-75kW VFD flange installation diagram

Model	Outline dimensions (mm)			Mount dimensions (mm)			Hole distance (mm)				Hole diameter (mm)	Screw	Net weight (kg)	Gross weight (kg)
	W1	H1	D1	W2	H2	D2	W3	H3	W4	H4				
1.5kW-2.2kW	150.2	234	185	115	220	65.5	130	190	7.5	13.5	5	M4	2	3
4kW-5.5kW	150.2	234	201	115	220	83	130	190	7.5	13.5	5	M4	2.5	3.5
7.5kW	170.2	292	192	131	276	84.5	150	260	9.5	6	6	M5	3	4
11kW-15kW	191.2	370	220	151	351	113	174	324	11.5	12	6	M5	6	7
18.5kW-22kW	266	371	208	250	250	104	224	350	13	20.3	6	M5	8.5	10.5
30kW-37kW	316	430	223	300	300	118.3	274	410	13	55	6	M5	16	17
45kW–75kW	352	580	258	332	400	133.8	306	570	12	80	9	M8	25	29

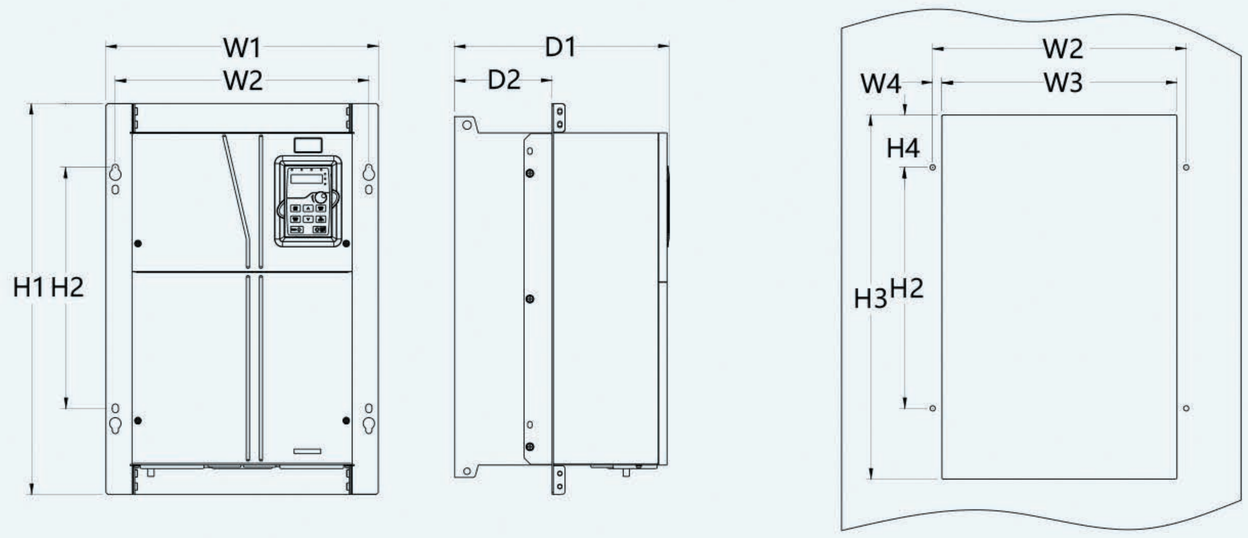

380V 90–110kW VFD flange installation diagram

Model	Outline dimensions (mm)			Mount dimensions (mm)			Hole distance (mm)			Hole diameter (mm)	Screw	Net weight (kg)	Gross weight (kg)
	W1	H1	D1	W2	H2	D2	H3	W4	H4				
90kW–110kW	418.5	600	330	389.5	370	149.5	559	14.2	108.5	10	M8	41	52

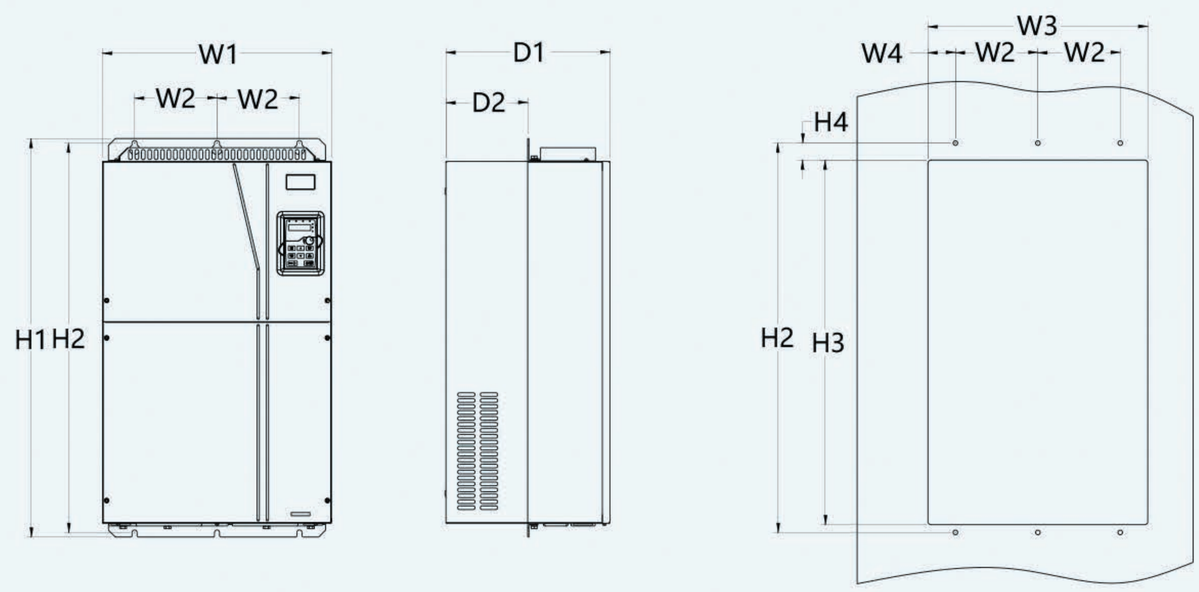

380V 132-200kW VFD flange installation diagram

Model	Outline dimensions (mm)			Mount dimensions (mm)			Hole distance (mm)				Hole diameter (mm)	Screw	Net weight (kg)	Gross weight (kg)
	W1	H1	D1	W2	H2	D2	W3	H3	W4	H4				
132kW–200kW	500	870	360	180	850	178.5	480	796	60	37	11	M10	85	110

Floor installation dimensions

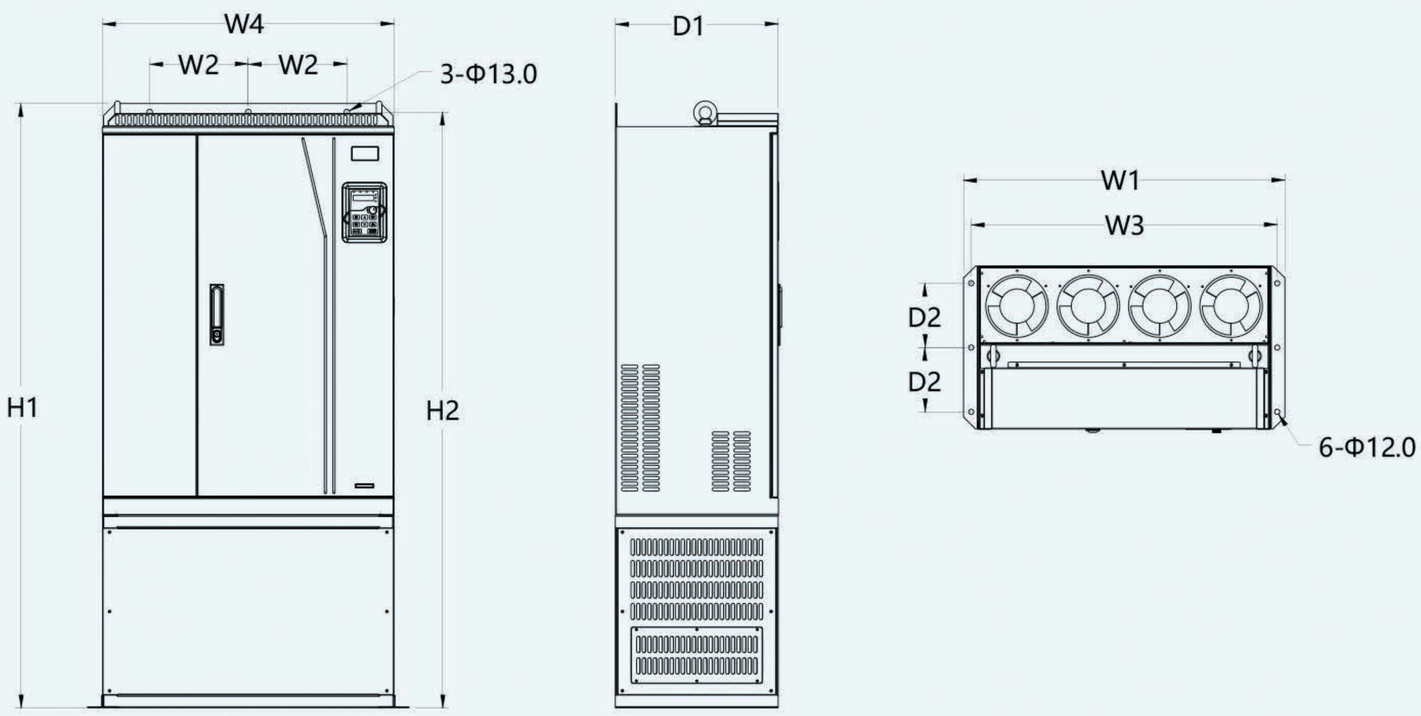

380V 220-315kW VFD floor installation diagram

Model	Outline dimensions (mm)				Mount dimensions (mm)				Hole diameter (mm)	Screw	Net weight (kg)	Gross weight (kg)
	W1	H1	D1	W4	W2	W3	H2	D2				
220kW-315kW	750	1410	380	680	230	714	1390	150	13/12	M12/ M10	135	165

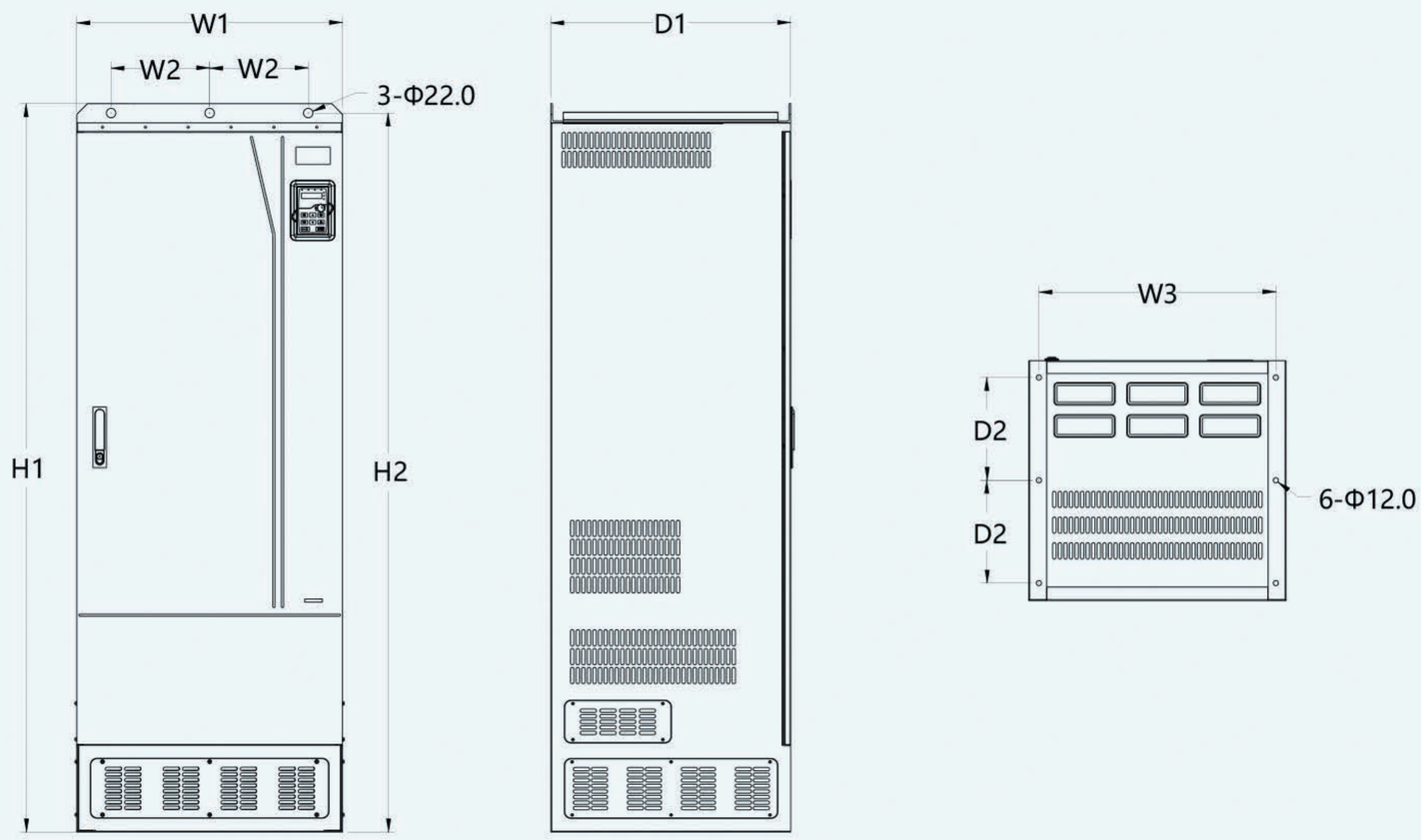

380V 355-500kW VFD floor installation diagram

Model	Outline dimensions (mm)				Mount dimensions (mm)				Hole diameter (mm)	Screw	Net weight (kg)	Gross weight (kg)
	W1	H1	D1	W4	W2	W3	H2	D2				
355kW–500kW	620	1700	560	-	230	572	1678	240	22/12	M12/ M10	350	407

AC 3PH 520V(-15%)–690V(+10%) VFD dimensions

Wall-mounting dimensions

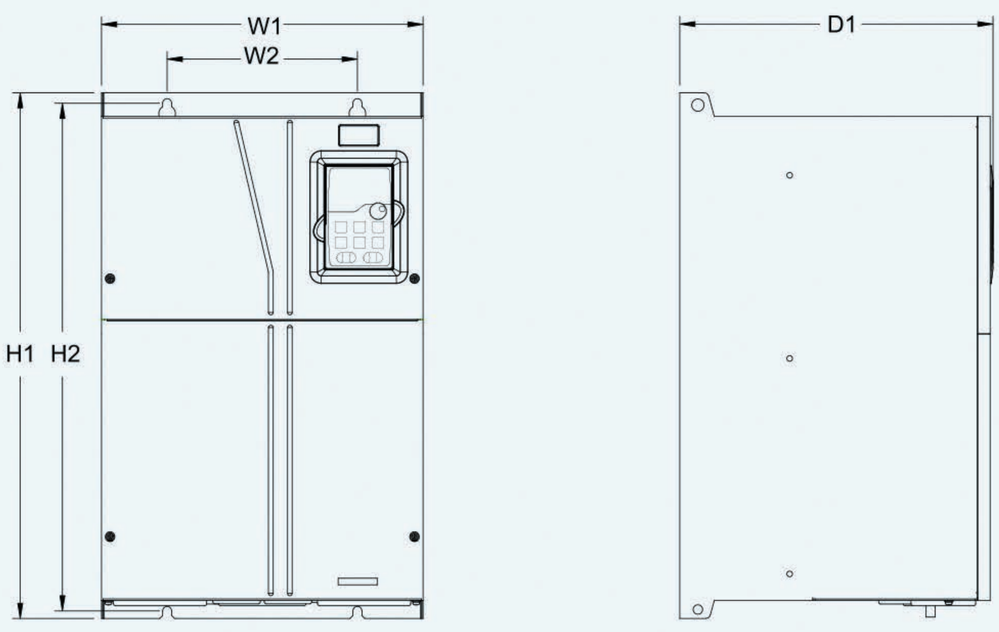

660V 22–132kW VFD wall-mounting diagram

Model	Outline dimensions (mm)			Mount dimensions (mm)		Hole diameter (mm)	Screw	Net weight (kg)	Gross weight (kg)
	W1	H1	D1	W2	H2				
22kW–45kW	270	555	325	130	540	7	M6	30	32
55kW–132kW	325	680	365	200	661	9.5	M8	47	67

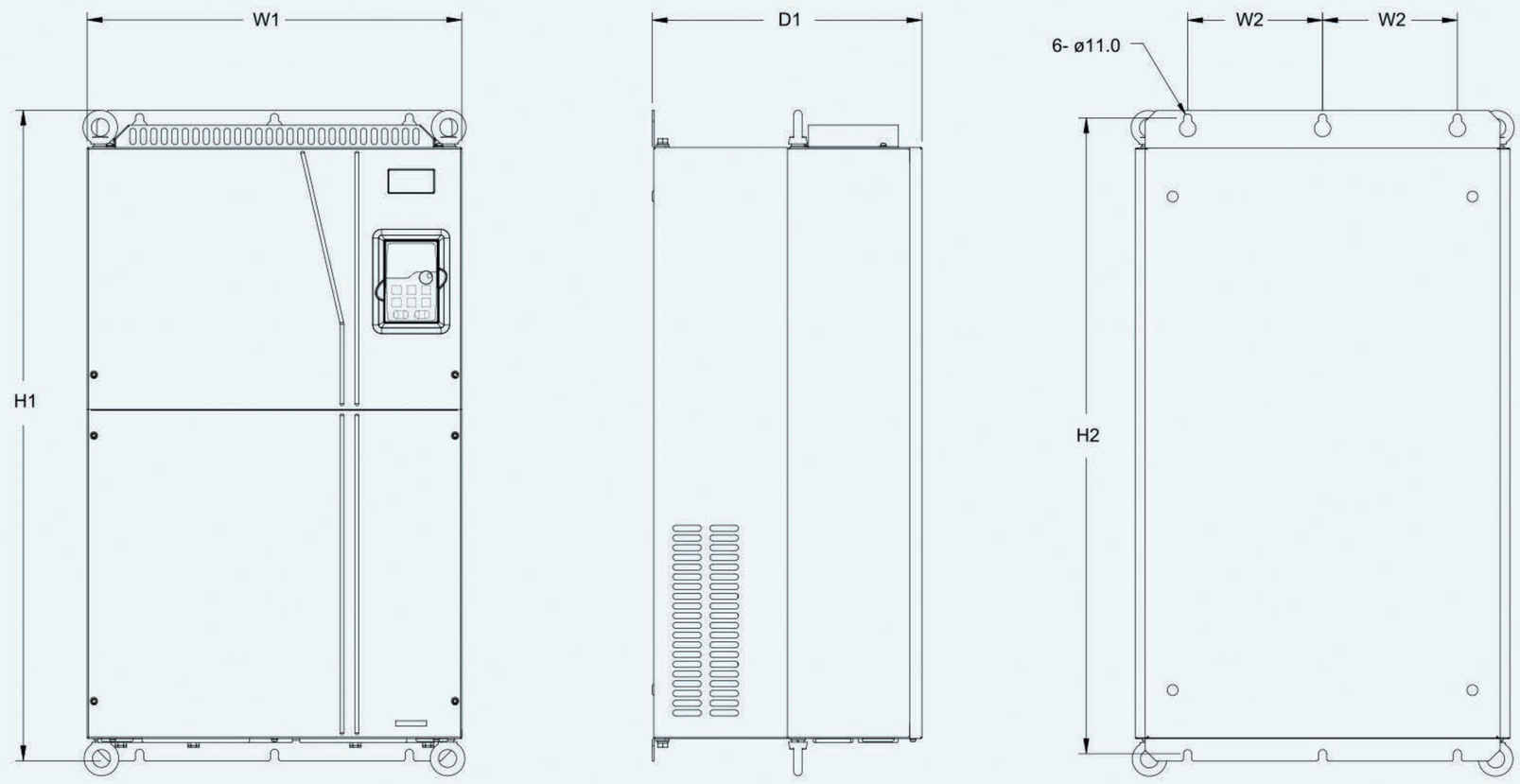

660V 160–220kW VFD wall-mounting diagram

Model	Outline dimensions (mm)			Mount dimensions (mm)		Hole diameter (mm)	Screw	Net weight (kg)	Gross weight (kg)
	W1	H1	D1	W2	H2				
160kW–220kW	500	870	360	180	850	11	M10	85	110

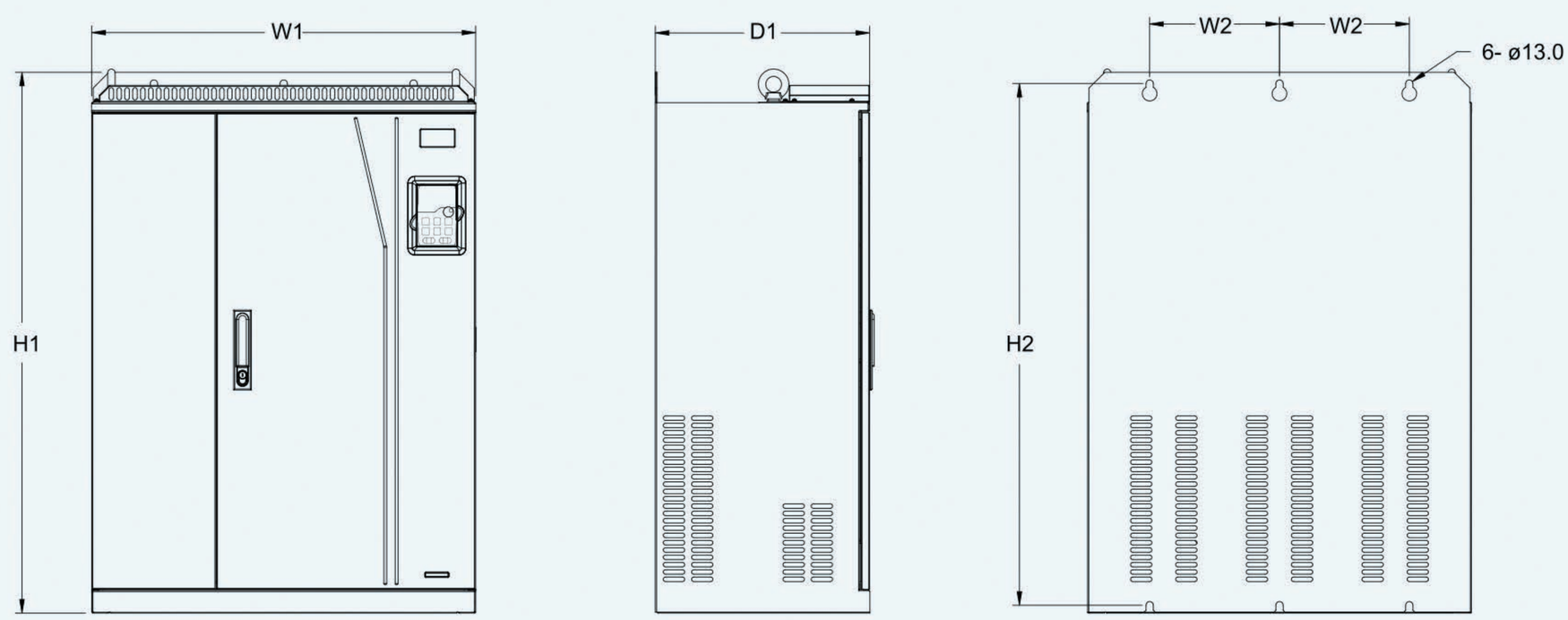

660V 250–355kW VFD wall-mounting diagram

Model	Outline dimensions (mm)			Mount dimensions (mm)		Hole diameter (mm)	Screw	Net weight (kg)	Gross weight (kg)
	W1	H1	D1	W2	H2				
250kW–355kW	680	960	380	230	926	13	M12	135	165

Flange installation dimensions

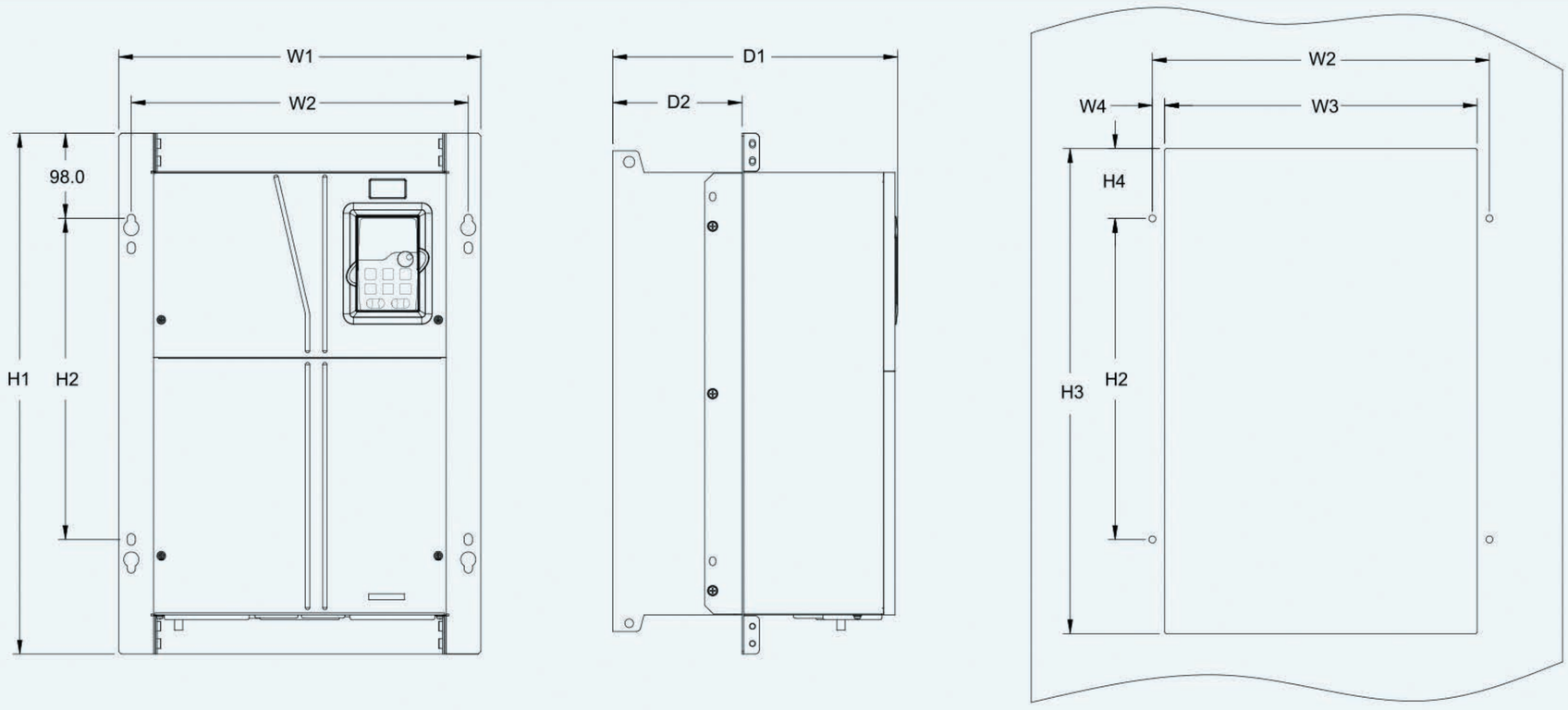

660V 22–132kW VFD flange installation diagram

Model	Outline dimensions (mm)			Mount dimensions (mm)			Hole distance (mm)				Hole diameter (mm)	Screw	Net weight (kg)	Gross weight (kg)
	W1	H1	D1	W2	H2	D2	W3	H3	W4	H4				
22kW–45kW	270	555	325	130	540	167	261	516	65.5	17	7	M6	30	32
55kW–132kW	325	680	363	200	661	182	317	626	58.5	23	9.5	M8	47	67

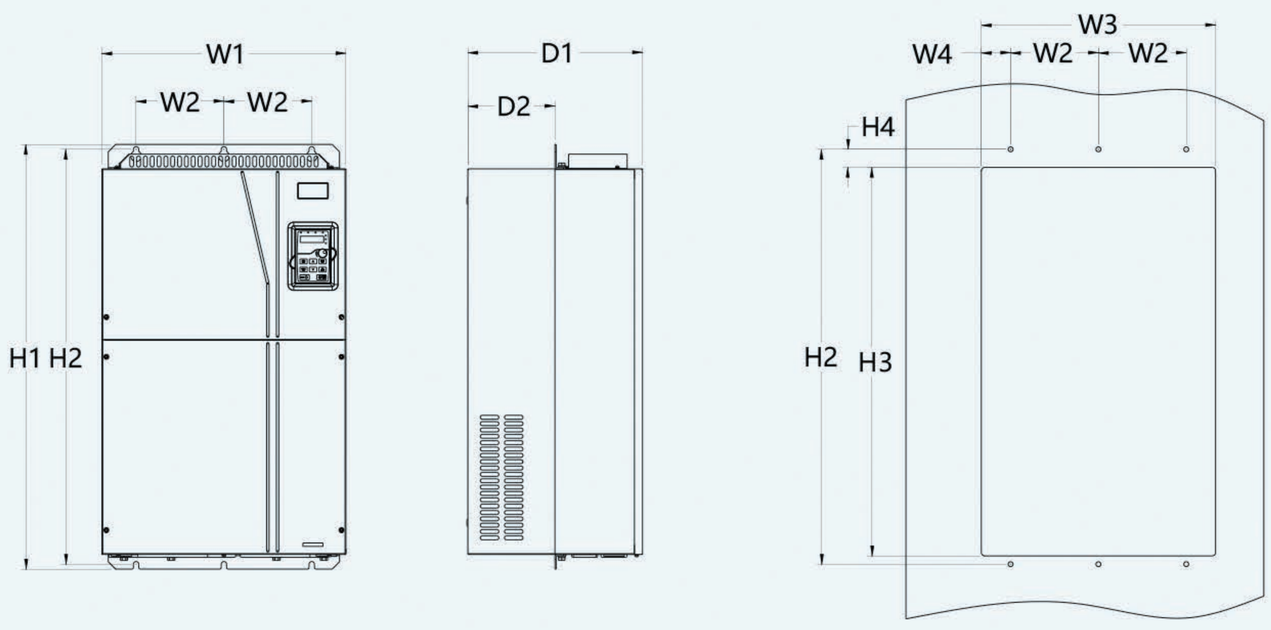

660V 160–220kW VFD flange installation diagram

Model	Outline dimensions (mm)			Mount dimensions (mm)			Hole distance (mm)				Hole diameter (mm)	Screw	Net weight (kg)	Gross weight (kg)
	W1	H1	D1	W2	H2	D2	W3	H3	W4	H4				
160kW–220kW	500	870	358	180	850	178.5	480	796	60	37	11	M10	85	110

Floor installation dimensions

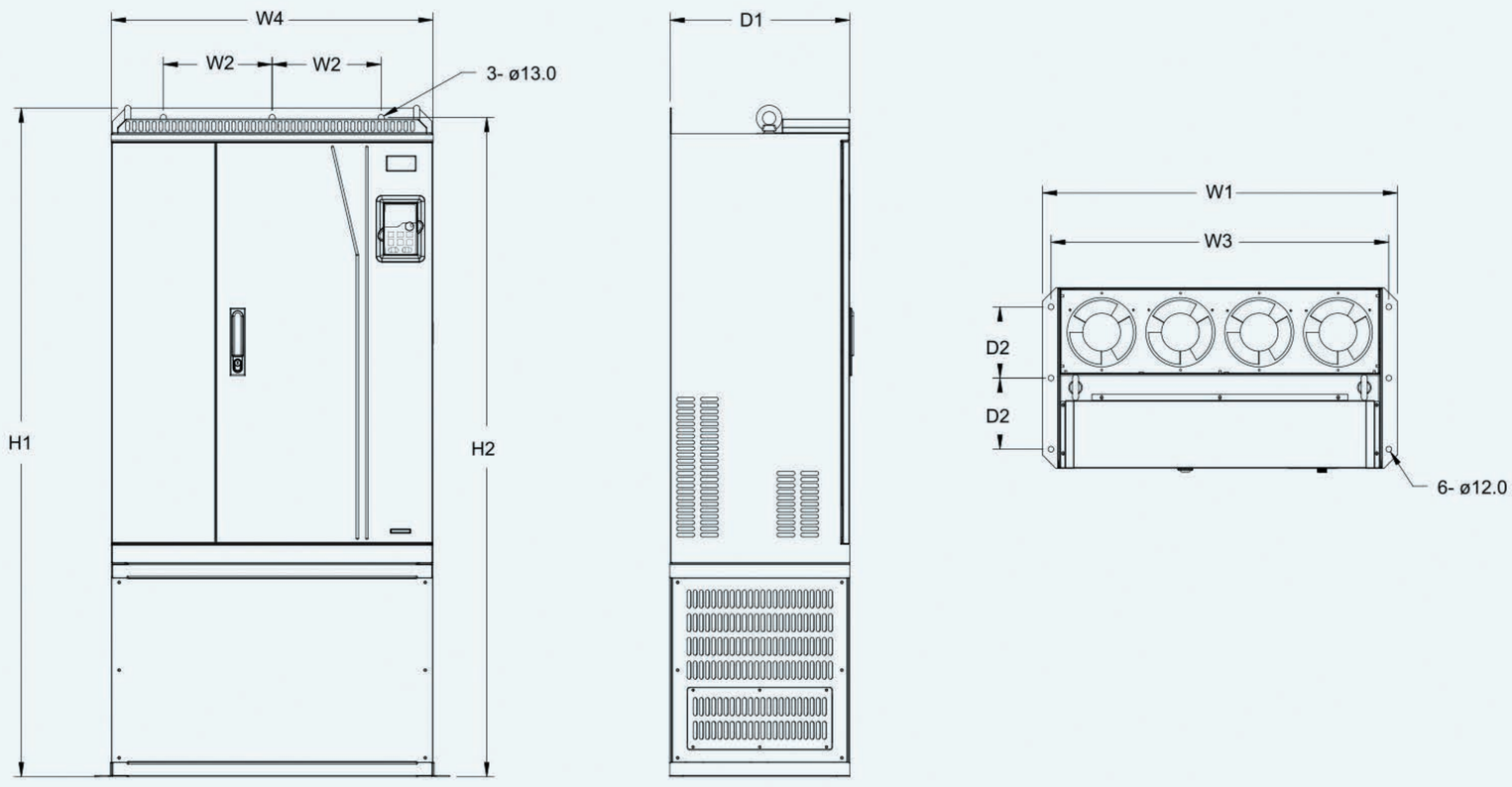

660V 250–355kW VFD floor installation diagram

Model	Outline dimensions (mm)				Mount dimensions (mm)				Hole diameter (mm)	Screw	Net weight (kg)	Gross weight (kg)
	W1	H1	D1	W4	W2	W3	H2	D2				
250kW–355kW	750	1410	380	680	230	714	1390	150	13/12	M12/ M10	135	165

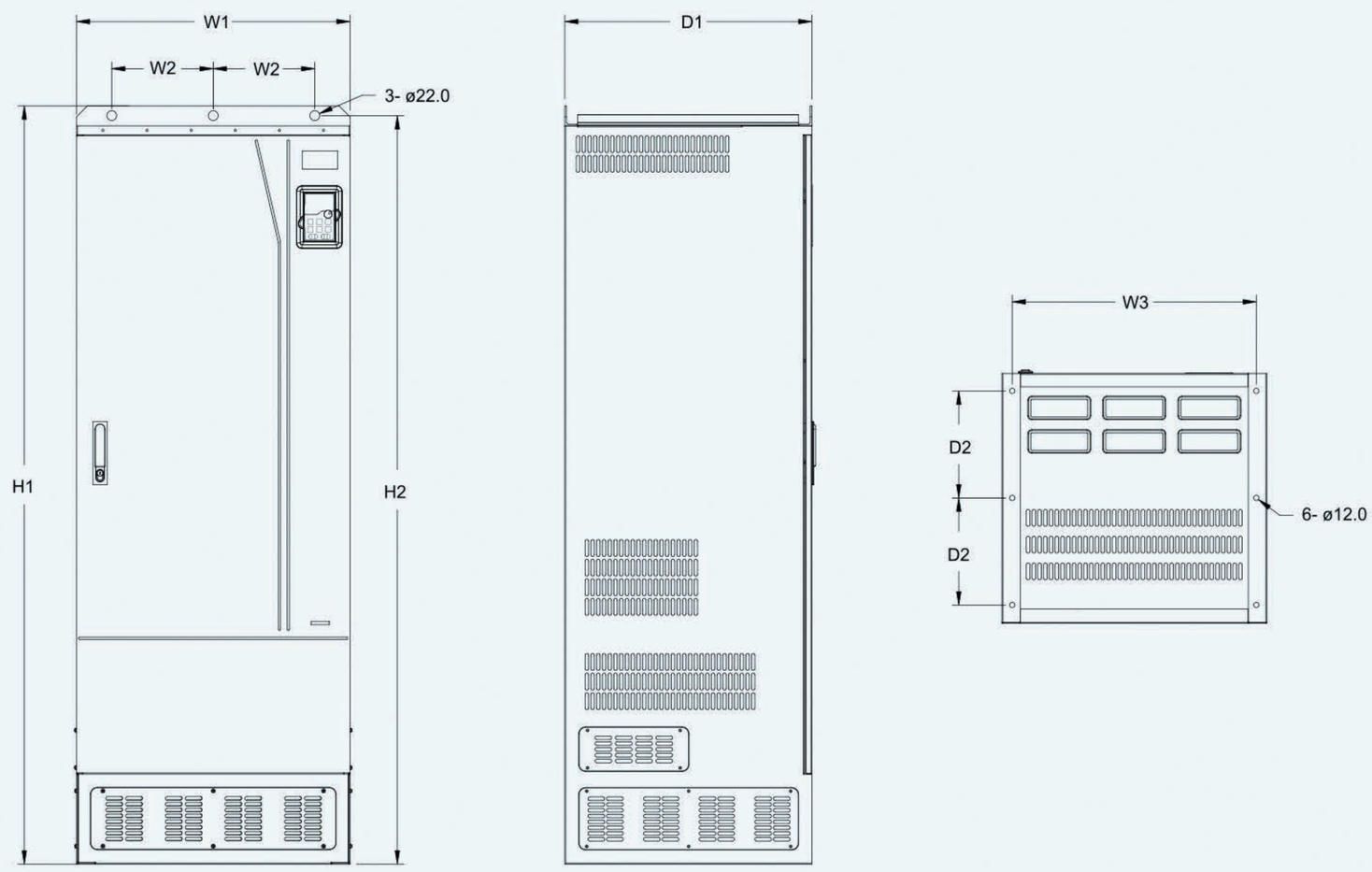

660V 400–630kW VFD floor installation diagram

Model	Outline dimensions (mm)				Mount dimensions (mm)				Hole diameter (mm)	Screw	Net weight (kg)	Gross weight (kg)
	W1	H1	D1	W4	W2	W3	H2	D2				
400kW–630kW	620	1700	560	-	230	570	1678	240	22/12	M12/ M10	350	407

Wiring Diagram

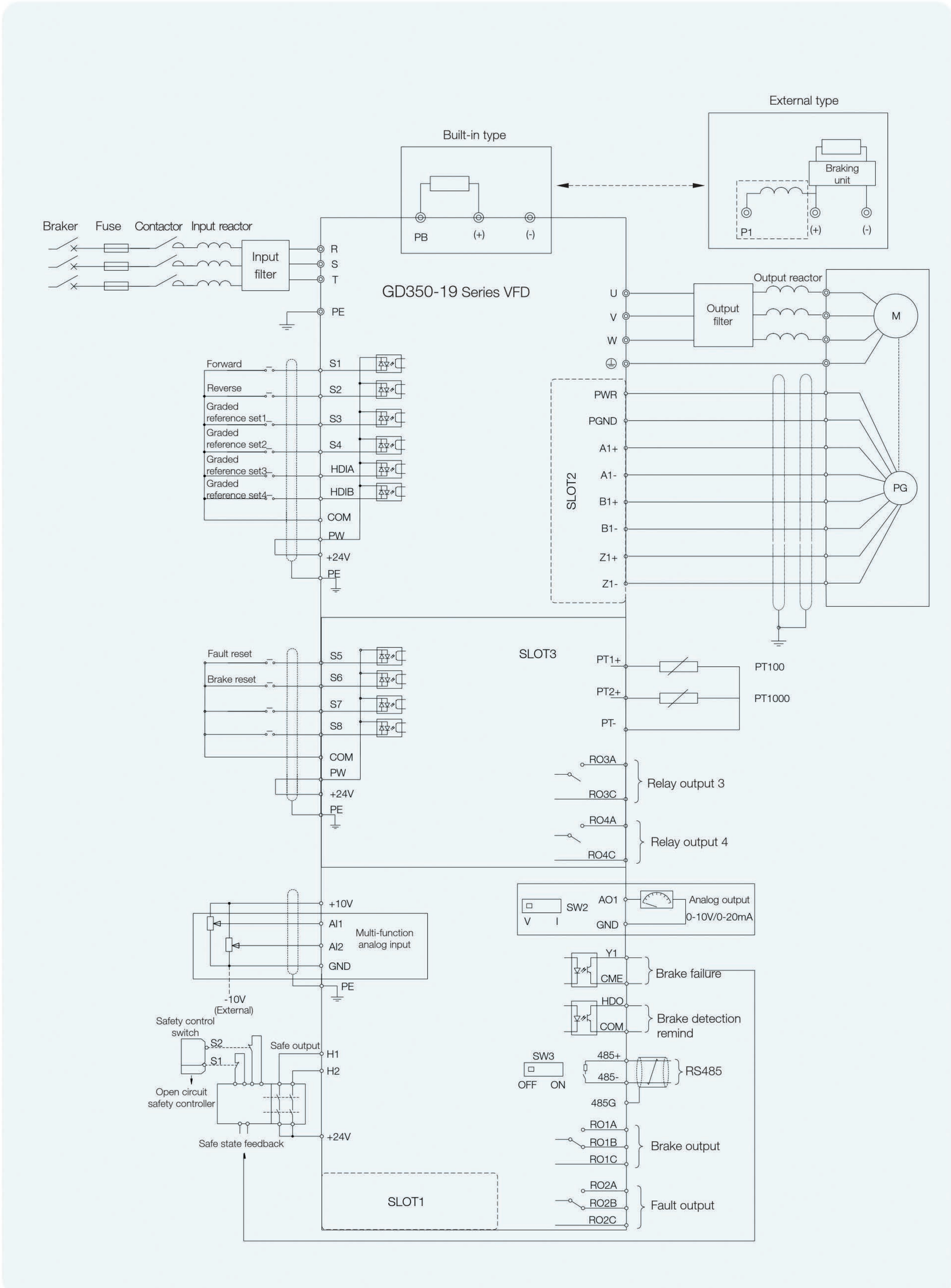

Marketing service network

INVT Factory * **3**

INVT Headquarter in Shenzhen

INVT Overseas Subsidiaries and office ***8**

More than **100** Overseas Partners

Factory

Overseas Subsidiaries or office

Your Trusted Industry Automation Solution Provider

E-mail:overseas@invt.com.cn Website:www.invt.com

SHENZHEN INVT ELECTRIC CO.,LTD. INVT Guangming Technology Building, Songbai Road, Matian, Guangming District, Shenzhen, China

Industrial Automation:
- HMI
- PLC
- VFD
- Servo System
- Elevator Intelligent Control System
- Rail Transit Traction System

Electric Power:
- UPS
- DCIM
- Solar Inverter
- New Energy Vehicle Powertrain System
- New Energy Vehicle Charging System
- New Energy Vehicle Motor

INVT Copyright.
Information may be subject to change without notice during product improving.

66003-00232 202212(V1.1)